PIONEER®
The Art of Entertainment

Service Manual

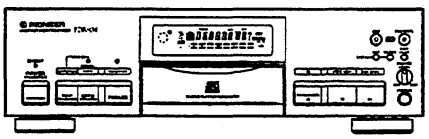

ORDER NO.
RRV1722

COMPACT DISC RECORDER
PDR-04

THIS MANUAL IS APPLICABLE TO THE FOLLOWING MODEL(S) AND TYPE(S).

Type	Model	Power Requirement	Remarks
	PDR-04		
KU/CA	O	AC120V	

CONTENTS

1. SAFETY INFORMATION 2
2. EXPLODED VIEWS AND PARTS LIST 3
3. SCHEMATIC DIAGRAM 10
4. PCB CONNECTION DIAGRAM 32
5. PCB PARTS LIST 41
6. ADJUSTMENT 46
7. GENERAL INFORMATION 72
   7.1 PARTS 72
      7.1.1 IC 72
      7.1.2 DISPLAY 94
   7.2 DIAGNOSIS 95
      7.2.1 DISASSEMBLY 95
   7.3 EXPLANATION 96
      7.3.1 BLOCK DIAGRAM 96
8. PANEL FACILITIES AND SPECIFICATIONS . 100

PIONEER ELECTRONIC CORPORATION 4-1, Meguro 1-Chome, Meguro-ku, Tokyo 153, Japan
PIONEER ELECTRONICS SERVICE, INC. P.O. Box 1760, Long Beach, CA 90801-1760, U.S.A.
PIONEER ELECTRONIC (EUROPE) N.V. Haven 1087, Keetberglaan 1, 9120 Melsele, Belgium
PIONEER ELECTRONICS ASIACENTRE PTE. LTD. 501 Orchard Road, #10-00 Lane Crawford Place, Singapore 0923

© PIONEER ELECTRONIC CORPORATION 1997

T - IZY FEB. 1997 Printed in Belgium

1. SAFETY INFORMATION

This service manual is intended for qualified service technicians ; It is not meant for the casual do-it-yourselfer. Qualified technicians have the necessary test equipment and tools, and have been trained to properly and safety repair complex products such as those covered by this manual.
Improperly performed repairs can adversely affect the safety and reliability of the product and may void the warranty. If you are not qualified to perform the repair of this product properly and safety, you should not risk trying to do so and refer the repair to a qualified service technician.

WARNING
Lead in solder used in this product is listed by the California Health and Welfare agency as a known reproductive toxicant which may cause birth defects or other reproductive harm (California Health & Safety Code, Section 25249.5).
When serving or handling circuit boards and other components which contain lead in solder, avoid unprotected skin contact with the solder. Also, when soldering do not inhale any smoke or fumes produced.

NOTICE
(FOR CANADIAN MODEL ONLY)
Fuse symbols (fast operating fuse) and/or (slow operating fuse) on PCB indicate that replacement parts must be of identical designation.

REMARQUE
(POUR MODÈLE CANADIEN SEULEMENT)
Les symboles de fusible (fusible de type rapide) et/ou (fusible de type lent) sur CCI indiquent que les pièces de remplacement doivent avoir la même désignation.

(FOR USA MODEL ONLY)

1. SAFETY PRECAUTIONS

The following check should be performed for the continued protection of the customer and service technician.

LEAKAGE CURRENT CHECK

Measure leakage current to a known earth ground (water pipe, conduit, etc.) by connecting a leakage current tester such as Simpson Model 229-2 or equivalent between the earth ground and all exposed metal parts of the appliance (input/output terminals, screwheads, metal overlays, control shaft, etc.). Plug the AC line cord of the appliance directly into a 120V AC 60Hz outlet and turn the AC power switch on. Any current measured must not exceed 0.5mA.

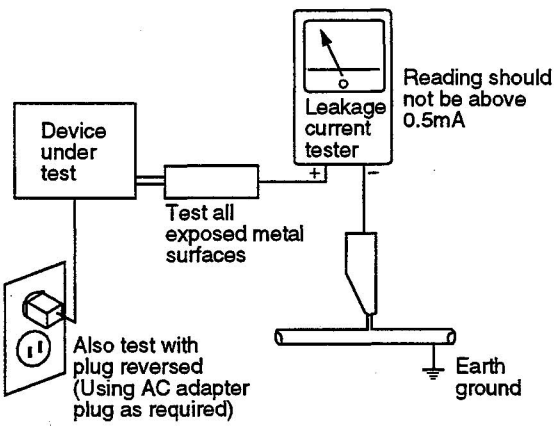

AC Leakage Test

ANY MEASUREMENTS NOT WITHIN THE LIMITS OUTLINED ABOVE ARE INDICATIVE OF A PO-TENTIAL SHOCK HAZARD AND MUST BE COR-RECTED BEFORE RETURNING THE APPLIANCE TO THE CUSTOMER.

2. PRODUCT SAFETY NOTICE

Many electrical and mechanical parts in the appli-ance have special safety related characteristics. These are often not evident from visual inspection nor the protection afforded by them necessarily can be ob-tained by using replacement components rated for vol-tage, wattage, etc. Replacement parts which have these special safety characteristics are identified in this Service Manual.

Electrical components having such features are identified by marking with a ⚠on the schematics and on the parts list in this Service Manual.
The use of a substitute replacement component which dose not have the same safety characteristics as the PIONEER recommended replacement one, shown in the parts list in this Service Manual, may create shock, fire, or other hazards.

Product Safety is continuously under review and new instructions are issued from time to time. For the latest information, always consult the current PIONEER Service Manual. A subscription to, or ad-ditional copies of, PIONEER Service Manual may be obtained at a nominal charge from PIONEER.

2. EXPLODED VIEWS AND PARTS LIST

NOTES: • *Parts marked by "NSP" are generally unavailable because they are not in our Master Spare Parts List.*
• *The ⚠ mark found on some component parts indicates the importance of the safety factor of the part. Therefore, when replacing, be sure to use parts of identical designation.*
• *Screws adjacent to ▼ mark on the product are used for disassembly.*

2.1 PACKING

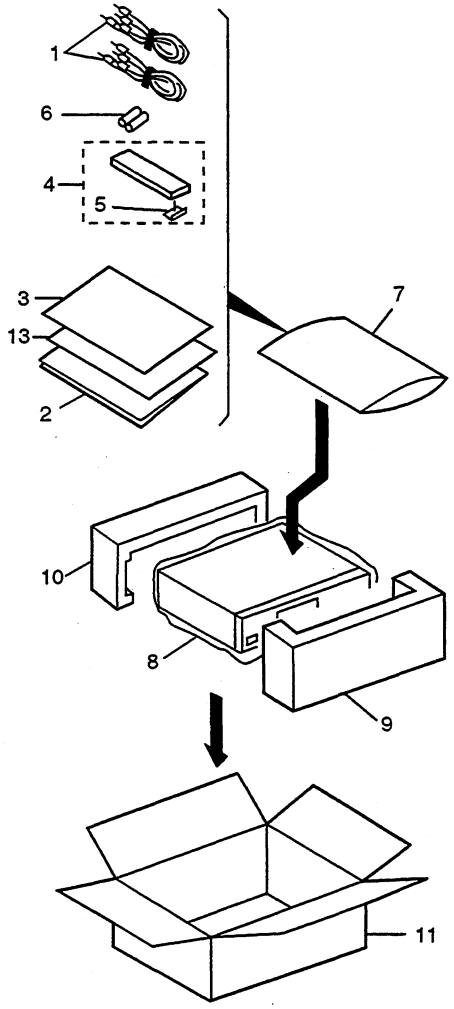

Parts List

Mark	No.	Description	Part No.
	1	Cord with Plug	PDE1248
	2	Operating Instructions (English)	PRB1251
	3	CD-R Disc Caution Card	PRM1046
	4	Wireless Remote Control Unit (CU-PD083)	PWW1116
	5	Battery Cover	AZA7123
NSP	6	Battery (R6P,AA)	VEM-013
	7	Polyethylene Bag	Z21-038
	8	Mirror Mat	Z23-007
	9	Styrol Protector F	PHA1243
	10	Styrol Protector R	PHA1245
	11	Packing Case	PHG2223
	12	•••••	
NSP	13	Warraty Card	ARY1044

PDR-04

2.2 EXTERIOR

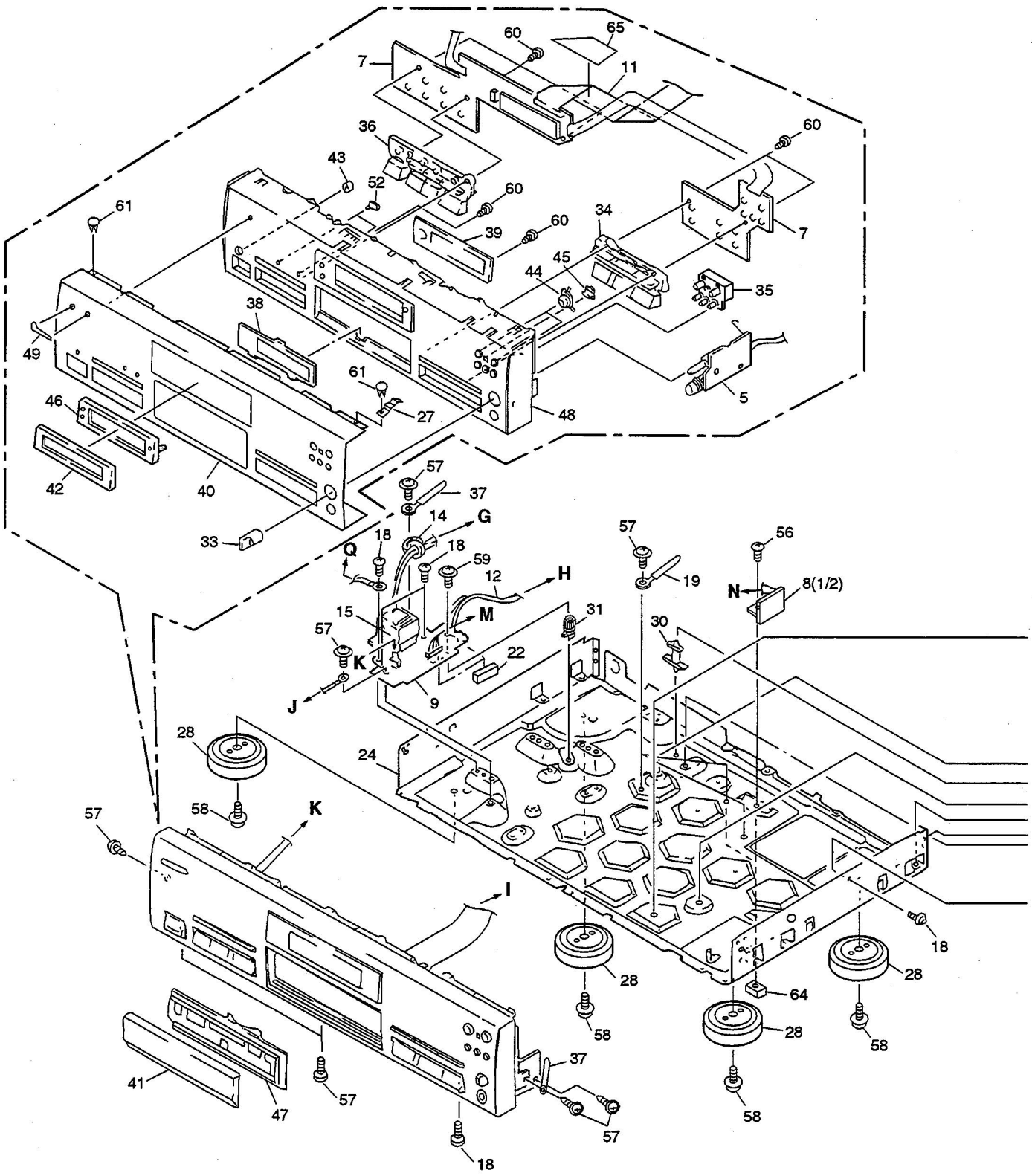

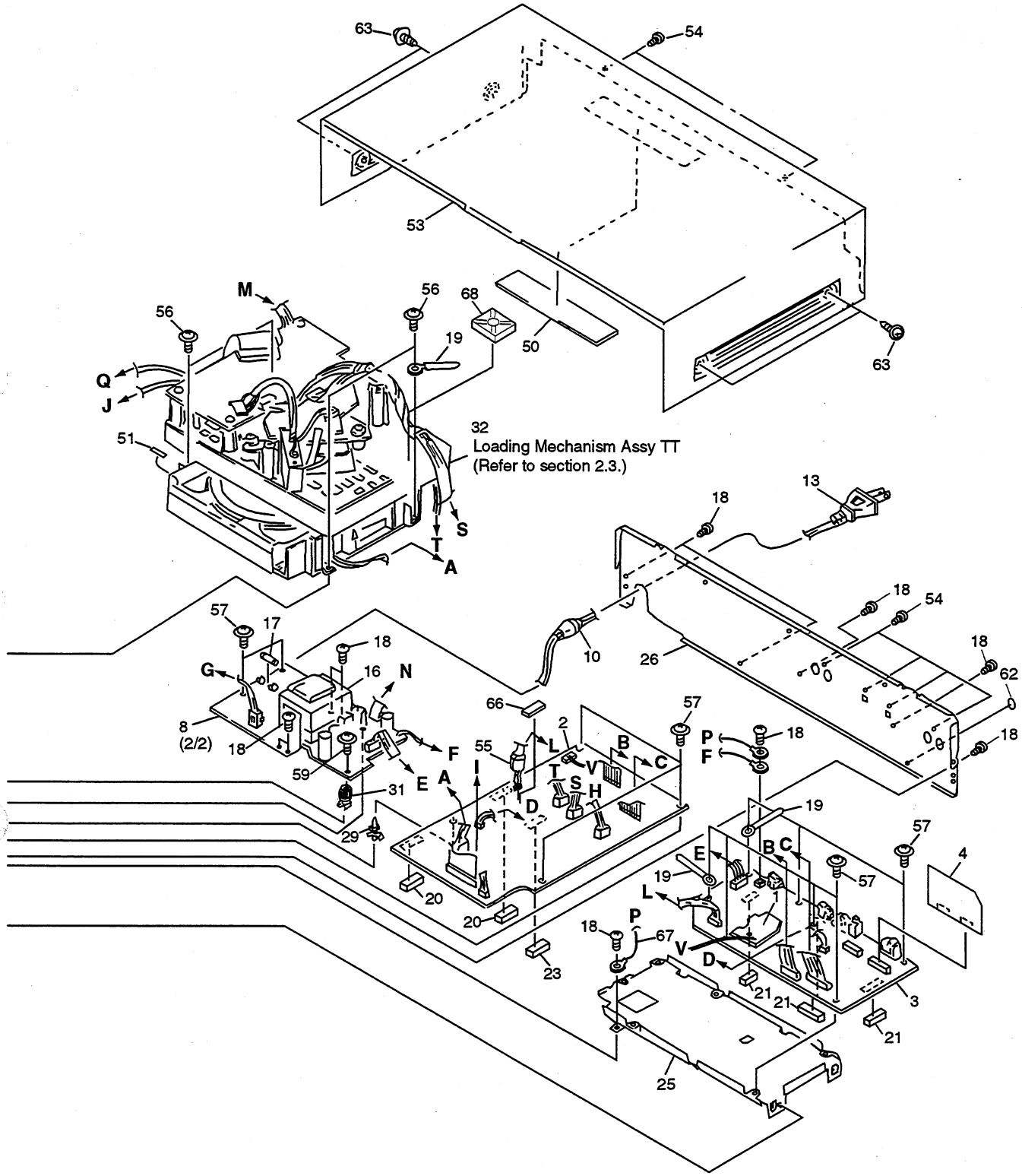
32
Loading Mechanism Assy TT
(Refer to section 2.3.)

PDR-04

Parts List

Mark	No.	Description	Part No.
NSP	1	STRATEGY SMALL BOARD ASSY	PWX1518
NSP	2	SERVO UCOM BOARD ASSY	PWZ3387
NSP	3	AUDIO DIGITAL BOARD ASSY	PWZ3388
NSP	4	ALC BOARD ASSY	PWZ3389
NSP	5	HEADPHONE BOARD ASSY	PWZ3390
	6	•••••	
	7	FUNCTION BOARD ASSY	PWZ3042
	8	POWER A BOARD ASSY	PWZ3354
	9	POWER B BOARD ASSY	PWZ3359
⚠	10	Strain Relief	CM-22C
	11	39P F.F.C/30V	PDD1181
	12	Connector Assy (5P)	PF05PP-D37
⚠	13	AC Power Cord	PDG1015
	14	Ferrite Core	PTH1018
⚠	15	Power Transformer (Servo, AC120V)	PTT1308
⚠	16	Power Transformer (Audio, AC120V)	PTT1309
⚠	17	Fuse (FU11,1A)	REK1075
	18	Screw	ABA1207
	19	Cord Clamper	RNH-184
NSP	20	Cushion (3.5)	PEB1110
NSP	21	Spacer A	PEB1228
	22	Rubber Spacer A	PEB1280
	23	Rubber Spacer B	PEB1281
NSP	24	Under Base	PNA2195
	25	Audio Angle	PNA2197
	26	Rear Base	PNA2314
	27	Earth Plate	PBK1090
	28	Insulator	PNW1912
NSP	29	PCB Holder	PNW2100
	30	PCB Holder	PNW2562
NSP	31	PCB Spacer	PNY-404
NSP	32	Loading Mechanism Assy TT	PXA1568
	33	Headphone Knob	PAC1600
	34	Operation Button 78	PAC1744
	35	REC Button	PAC1804
	36	Power Button	PAC1805
NSP	37	Cord Clamper	DNF1128
	38	Display Window	PAM1668
	39	FL Sheet	PAM1673
	40	Front Panel	PAN1349
	41	Tray Panel	PNW2701
	42	Display Panel 7	PNW2662
	43	LED Lens	PNW2019
	44	REC Ring	PNW2558
	45	REC Lens	PNW2559
	46	Holder	PNW2591
	47	Tray Holder	PNW2592
	48	Control Panel	PNW2703
	49	Name Plate	VAM1032
	50	65 Label	ORW1069
	51	•••••	
	52	Indicator Lens	PEA1206
	53	Bonnet	PYY1175
	54	Screw	BBT30P080FCC
	55	Ferrite Core	PTH1009
	56	Screw	BBZ30P080FCC
	57	Screw	IBZ30P060FCC
	58	Screw	IBZ30P080FCC
	59	Screw	IBZ30P150FCC
	60	Screw	PPZ30P150FMC
	61	Rivet	RBM-003
	62	Black Label	PRW1470
	63	Screw	FBT40P080FZK
	64	Disc Guard	PNM1245
	65	Shield Sheet	PNM1308
	66	IC	PYY1196
	67	Earth Lead Unit	PDF1154
	68	Binder Holder	PNW1021

2.3 LOADING MECHANISM ASSY TT

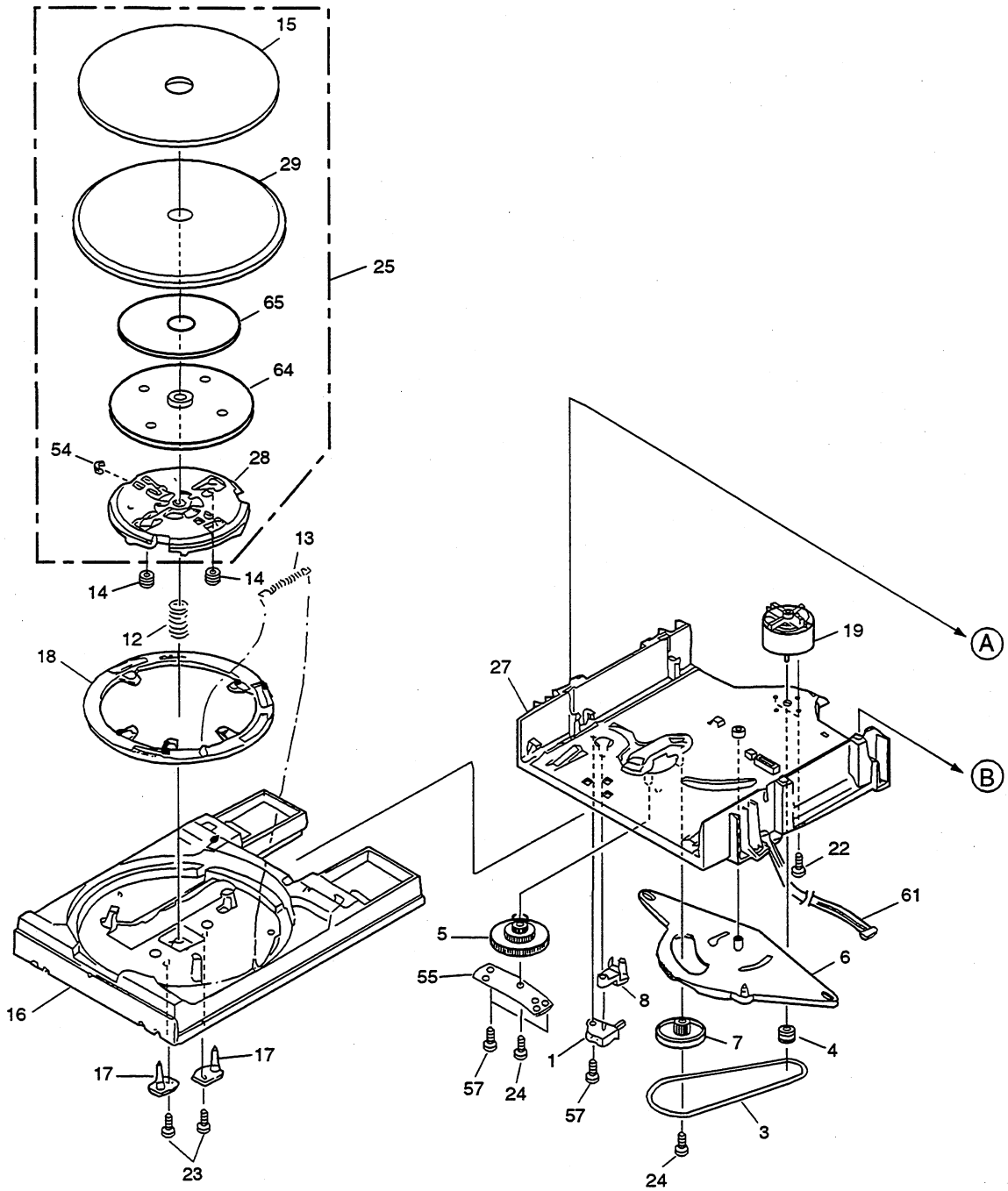

PDR-04

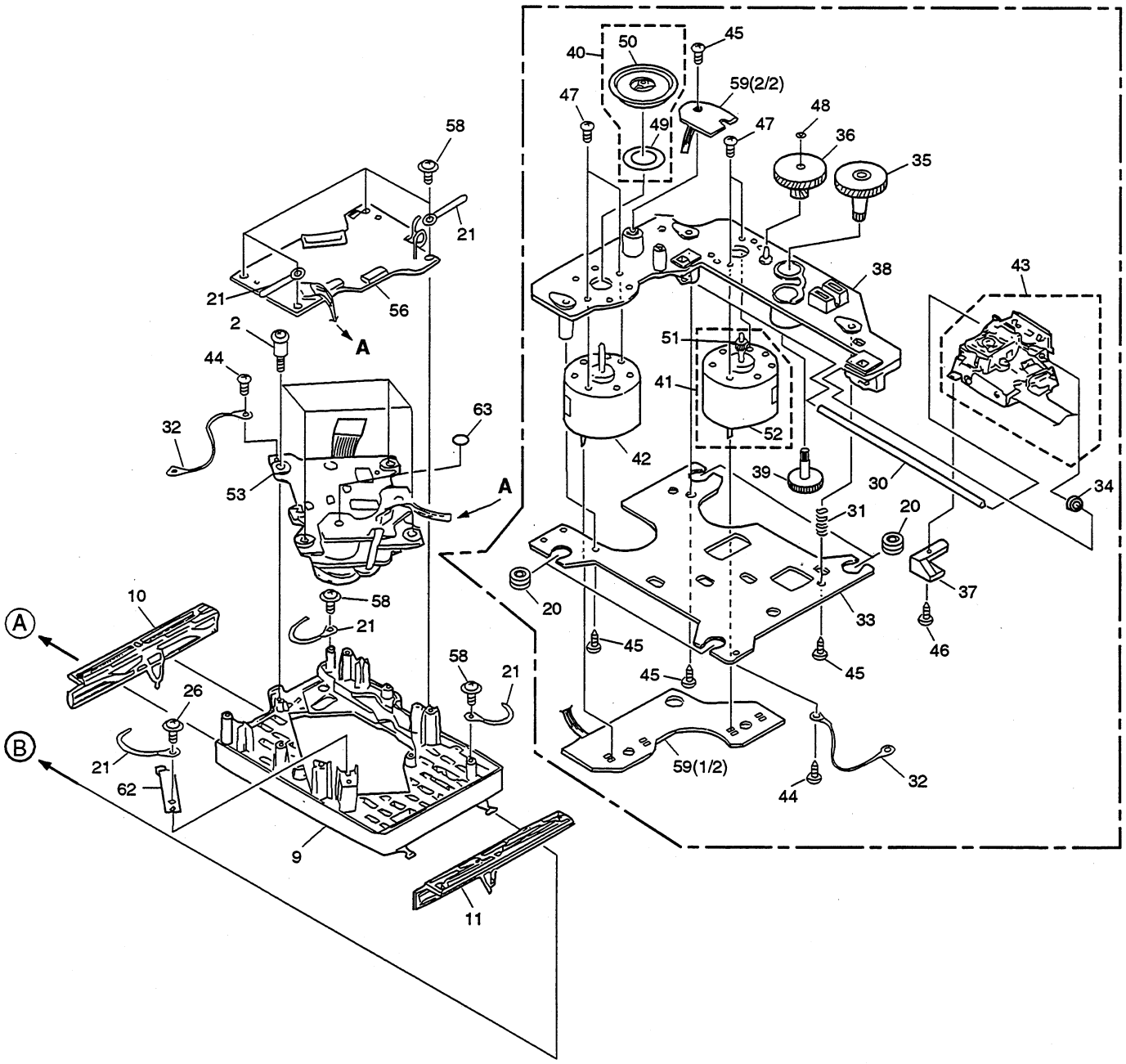

58
21
21
56
A
2
44
32
63
53
A
10
A
58
21
58
21
26
B
21
62
9
11
40
50
45
59(2/2)
47
49
47
48
36
35
38
43
51
41
52
42
39
30
34
31
20
20
37
33
46
45
45
45
59(1/2)
44
32

Parts List

Mark	No.	Description	Part No.
	1	Lever Switch (S101)	DSK1003
	2	Float Screw	PBA1027
	3	Rubber Belt	PEB1186
	4	Motor Pulley	PNW1634
	5	Drive Gear	PNW1996
	6	Timing Lever	PNW2168
	7	Gear Pulley	PNW1998
	8	SW Head	PNW1999
	9	Float Base	PNW2563
	10	Left Cam	PNW2001
	11	Right Cam	PNW2002
	12	Float Spring	PBH1120
	13	Lock Spring	PBH1121
	14	Float Rubber	PEB1014
	15	Table Rubber Sheet	PEB1181
	16	Tray	PNW2003
	17	Table Guide	PNW2004
	18	Lock Plate	PNW2005
	19	D.C. Motor (0.75W,Loading)	PXM1010
	20	Float Rubber	PEB1031
	21	Cord Clamper	RNH-184
	22	Screw	BMZ26P040FMC
	23	Screw	IPZ26P060FCU
	24	Screw	IPZ20P080FMC
	25	Turn Table Assy	PEA1165
	26	Screw	IPZ30P080FCU
	27	Loading Base	PNW1995
NSP	28	Table Shaft Holder	PXA1383
NSP	29	Turn Table	PNR1035
	30	Guide Shaft	DLA1530
	31	Earth Spring	PBH1196
NSP	32	Earth Lead Unit /300V	PDF1088
	33	TAN Base	PNB1514
	34	Stopper Ring	PNM1246
	35	Gear 2	PNW2513
	36	Gear 3	PNW2514
	37	TAN Plate TT	PNW2518
	38	Mechanism Chassis	PNW2520
	39	Gear 1	PNW2521
	40	Disc Table TT Assy	PEA1323
	41	Carriage Motor Assy	PEA1324
	42	D.C Motor Assy (Spindle)	PEA1325
	43	Pickup Assy	PEA1341
	44	Screw	BBZ26P040FMC
	45	Screw	BBZ26P080FMC
	46	Screw	BMZ20P040FMC
	47	Screw	JFZ20P030FNI
	48	Washer	WT12D032D025
NSP	49	Mirror Mat	PNM1247
	50	Disc Table TT	PNW2516

Mark	No.	Description	Part No.
	51	Pinion Gear	PNW2515
NSP	52	Spindle D.C Motor (0.3W)	PXM1033
NSP	53	Servo Mechanism Assy	PXA1560
	54	Stop Ring	YE20S
	55	Shaft Holder	PNB1382
NSP	56	HEAD BOARD ASSY	PWZ3386
	57	Screw	BPZ26P060FMC
	58	Screw	IBZ30P080FCC
NSP	59	MECHANISM BOARD ASSY	PWZ3391
	60	•••••	
	61	Connector Assy 5P	PDE1243
	62	Clamp Spring	PBK1139
	63	Spacer	PBF1014
NSP	64	Table Base Assy	PXA1382
NSP	65	Double Face Tape	PNM1114

•How to install the disc table

1 Use nippers or other tool to cut the two sections marked Ⓐ in figure 1. Then remove the spacer.

2 While supporting the spindle motor shaft with the stopper, put the spacer on top of the mechanism chassis and stick the disc table TT on top (takes about 9kg pressure). Take off the spacer.

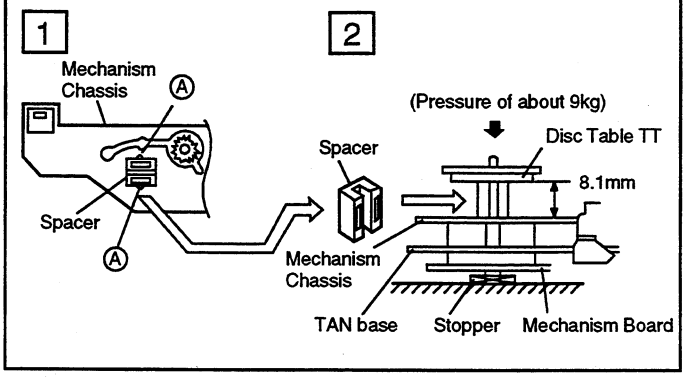

3. SCHEMATIC DIAGRAM

3.1 OVERALL WIRING DIAGRAM

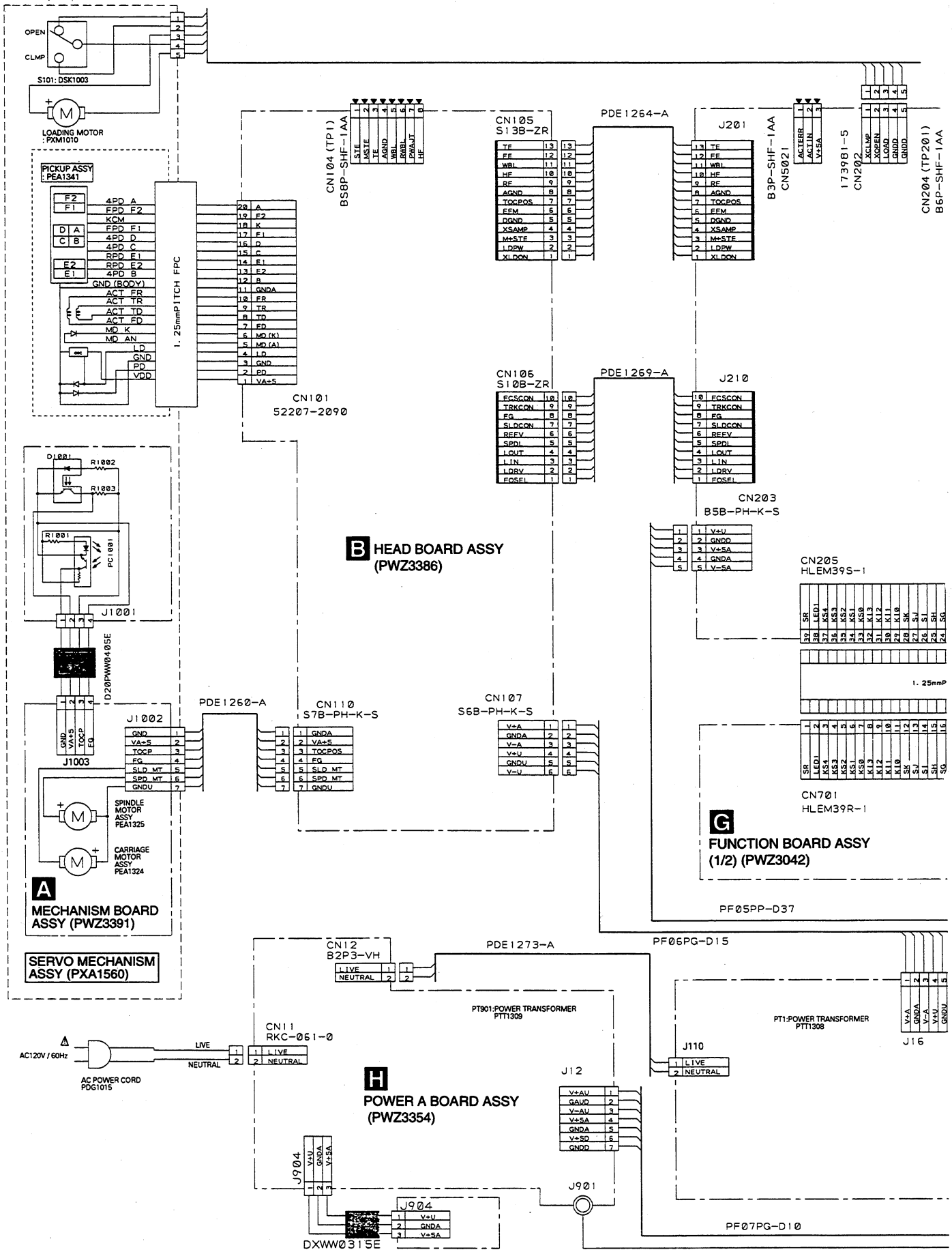

Note : When ordering service parts, be sure to refer to
"EXPLODED VIEWS AND PARTS LIST" or "PCB PARTS LIST"

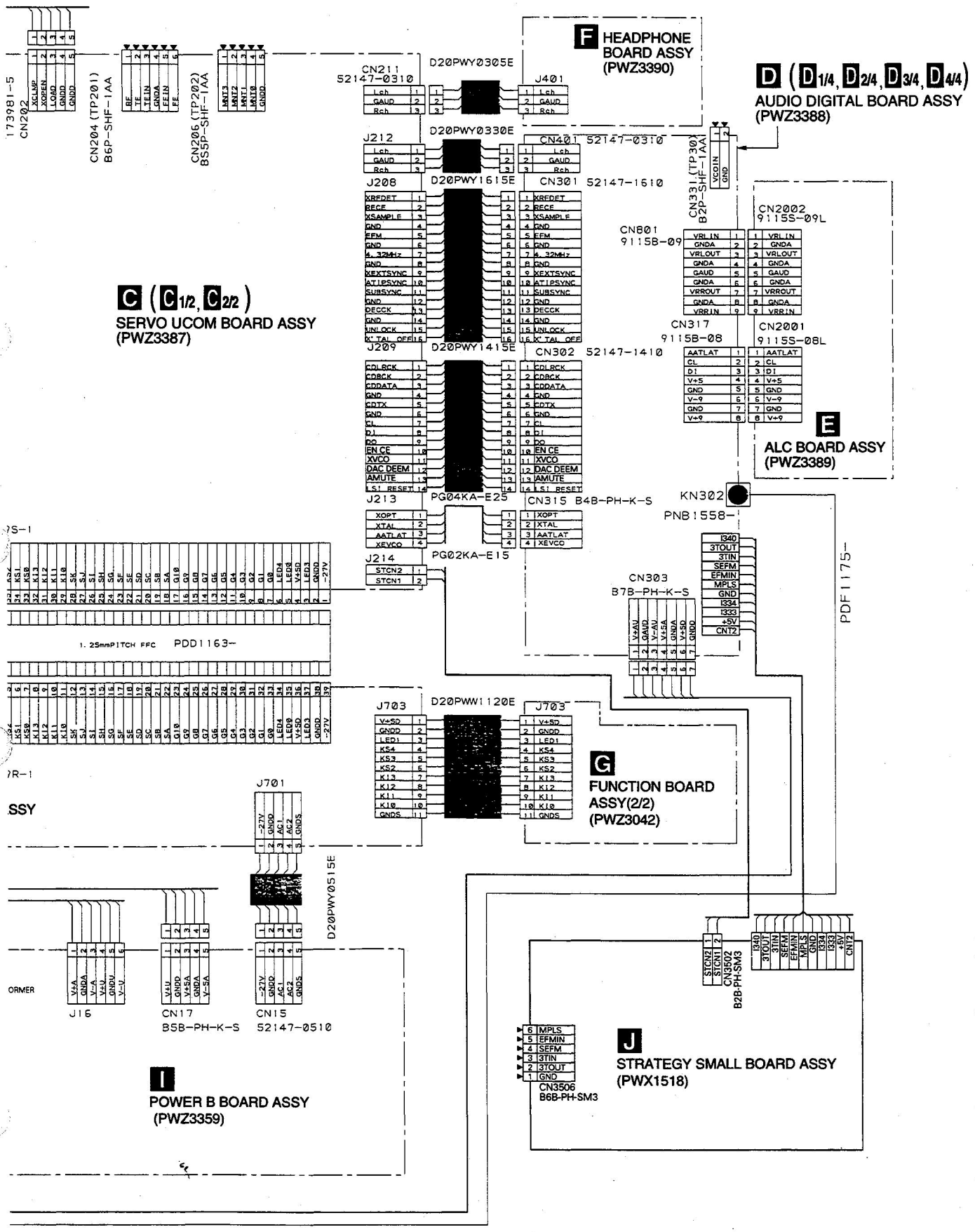

3.2 MECHANISM AND HEAD BOARD ASSEMBLIES

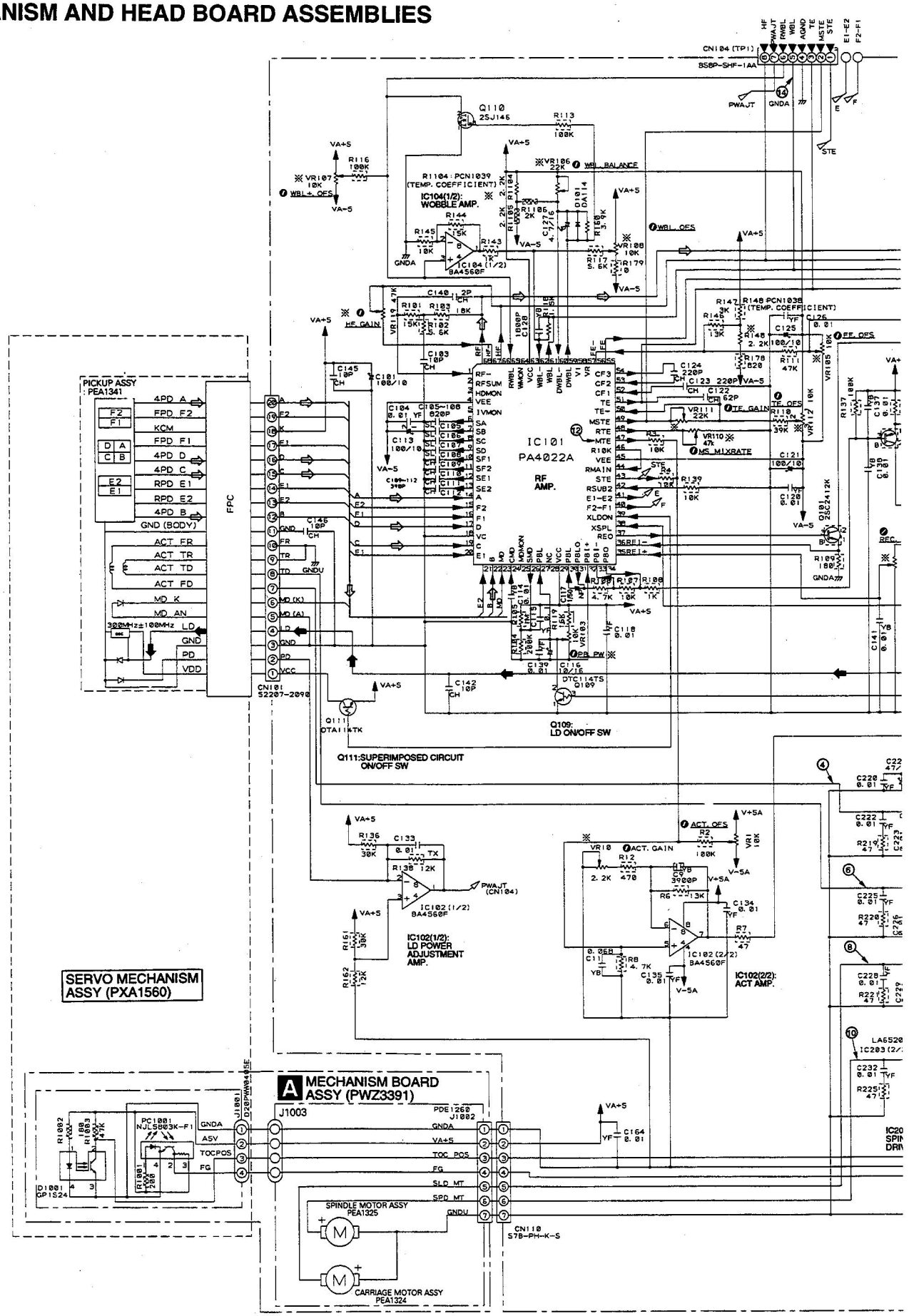

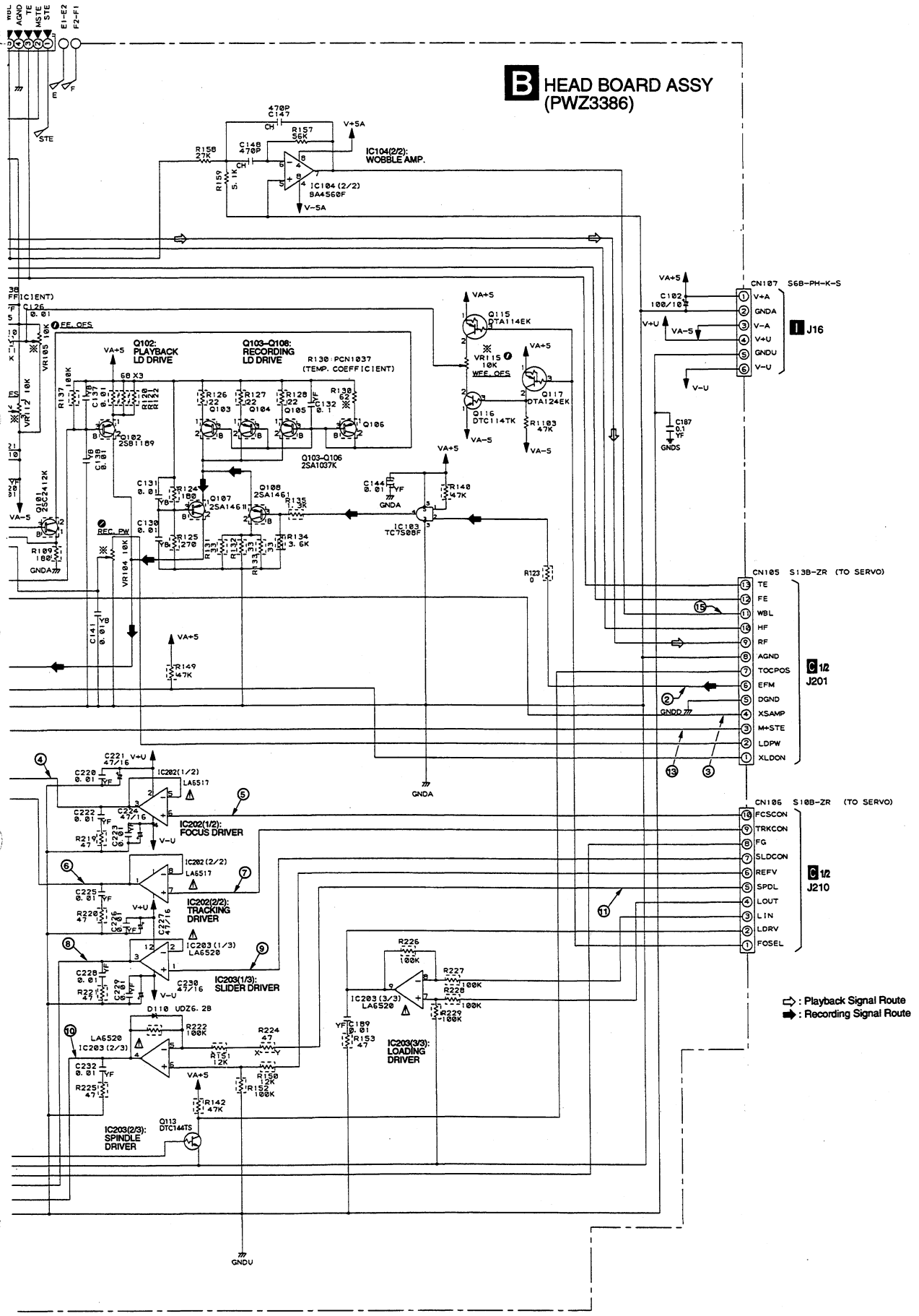
B HEAD BOARD ASSY (PWZ3386)
IC104(2/2): WOBBLE AMP.
IC104 (2/2) BA4560F
Q102: PLAYBACK LD DRIVE
Q103–Q106: RECORDING LD DRIVE
R130 :PCN1037 (TEMP. COEFFICIENT)
Q103–Q106 2SA1037K
FE. OFS
WFE. OFS
REC. PW
CN107 S6B-PH-K-S
J16
CN105 S13B-ZR (TO SERVO)
J201
CN106 S10B-ZR (TO SERVO)
J210
IC202(1/2): FOCUS DRIVER
IC202(2/2): TRACKING DRIVER
IC203(1/3): SLIDER DRIVER
IC203(2/3): SPINDLE DRIVER
IC203(3/3): LOADING DRIVER
: Playback Signal Route
: Recording Signal Route

PDR-04

3.3 SERVO UCOM BOARD ASSY (1/2)

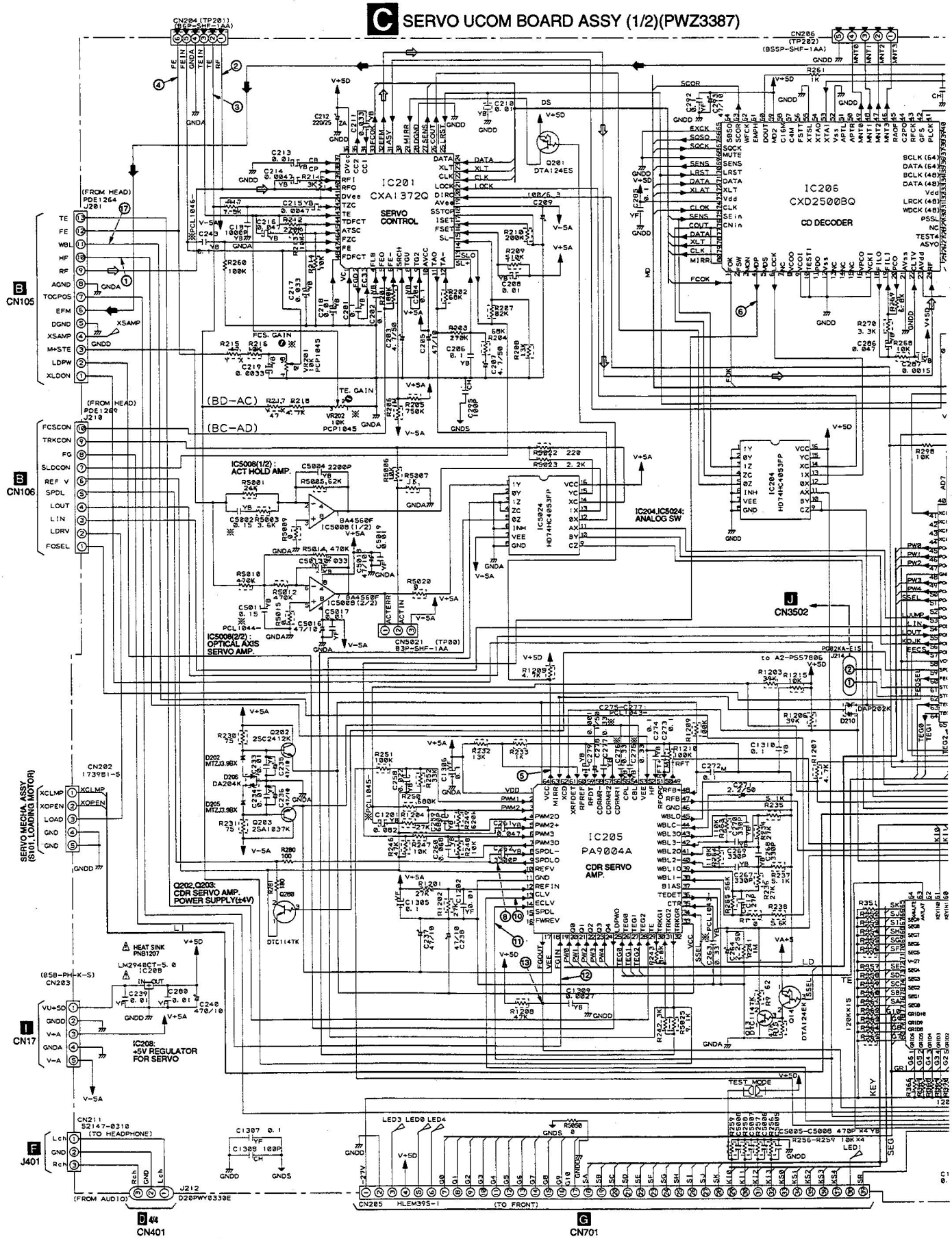

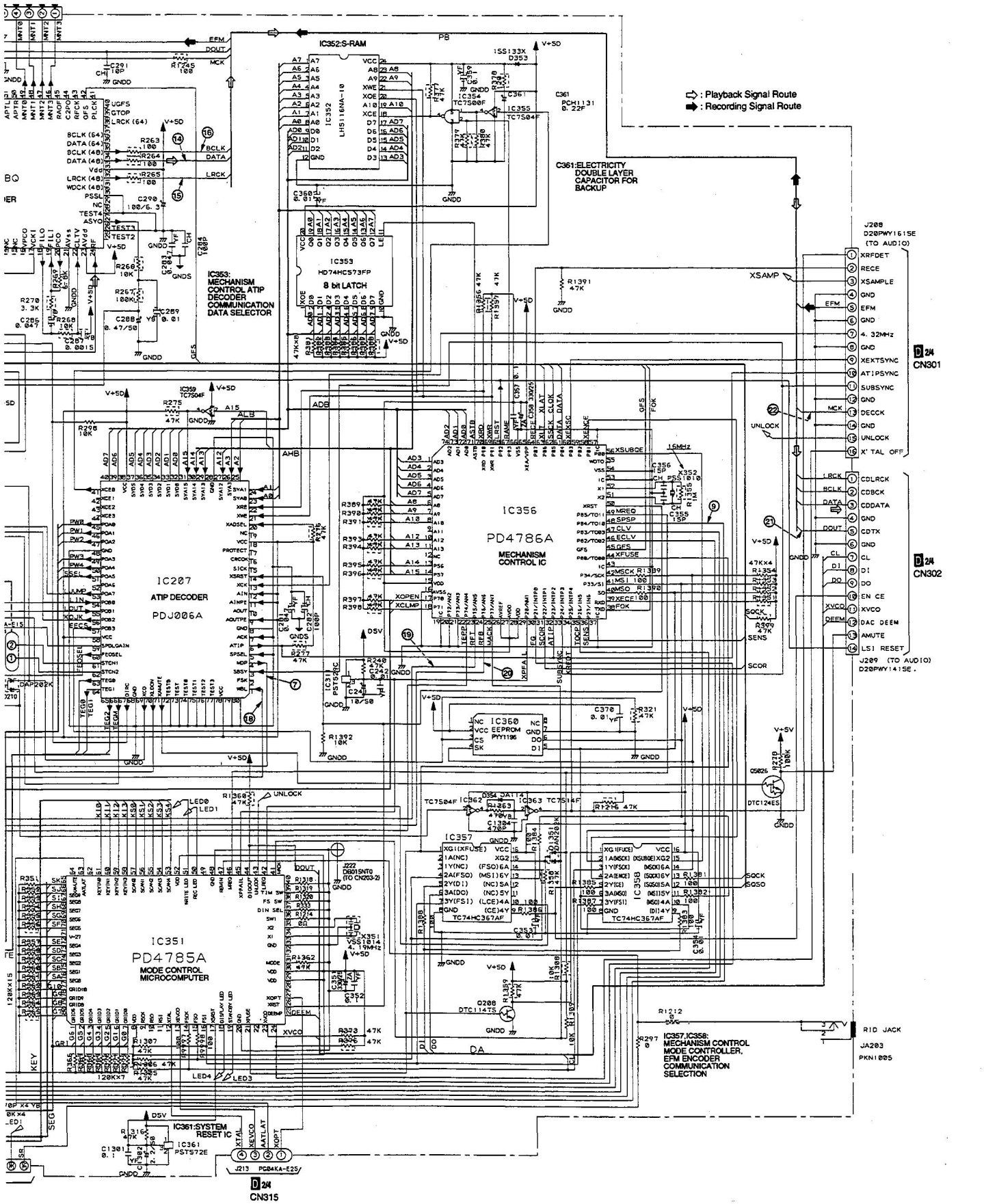
⇨ : Playback Signal Route
➡ : Recording Signal Route
IC352:S-RAM
IC353
HD74HC573FP
8 bit LATCH
IC353:
MECHANISM
CONTROL ATIP
DECODER
COMMUNICATION
DATA SELECTOR
C361:ELECTRICITY
DOUBLE LAYER
CAPACITOR FOR
BACKUP
IC207
ATIP DECODER
PDJ006A
IC356
PD4786A
MECHANISM
CONTROL IC
IC351
PD4785A
MODE CONTROL
MICROCOMPUTER
IC357,IC358:
MECHANISM CONTROL
MODE CONTROLLER,
EFM ENCODER
COMMUNICATION
SELECTION
IC361:SYSTEM
RESET IC
J208
D20PWY1615E
(TO AUDIO)
J209 (TO AUDIO)
D20PWY1415E.
D 2/4
CN301
D 2/4
CN302
D 2/4
CN315
RID JACK
JA203
PKN1005

3.4 AUDIO DIGITAL BOARD ASSY (1/4) AND STRATEGY SMALL BOARD ASSY

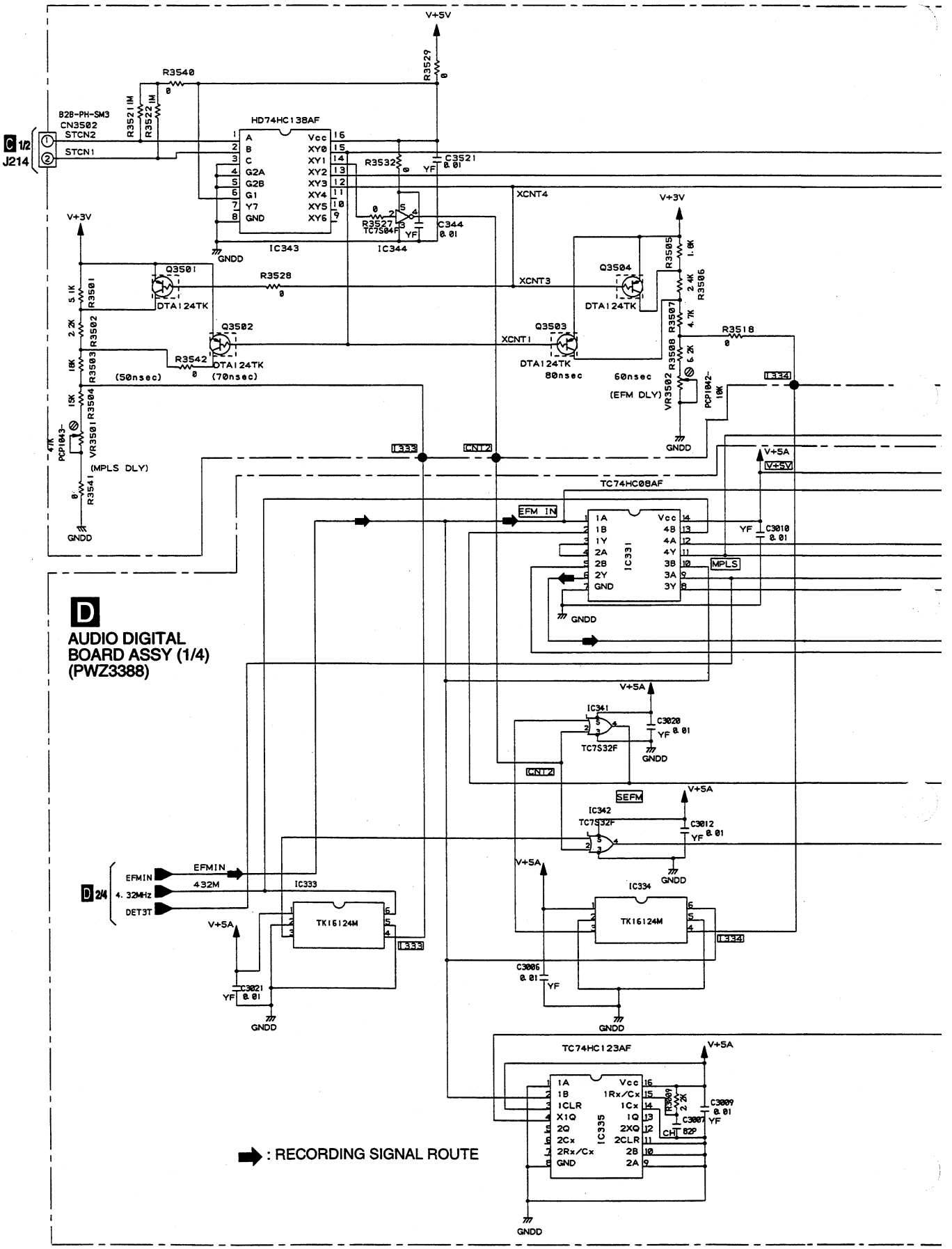

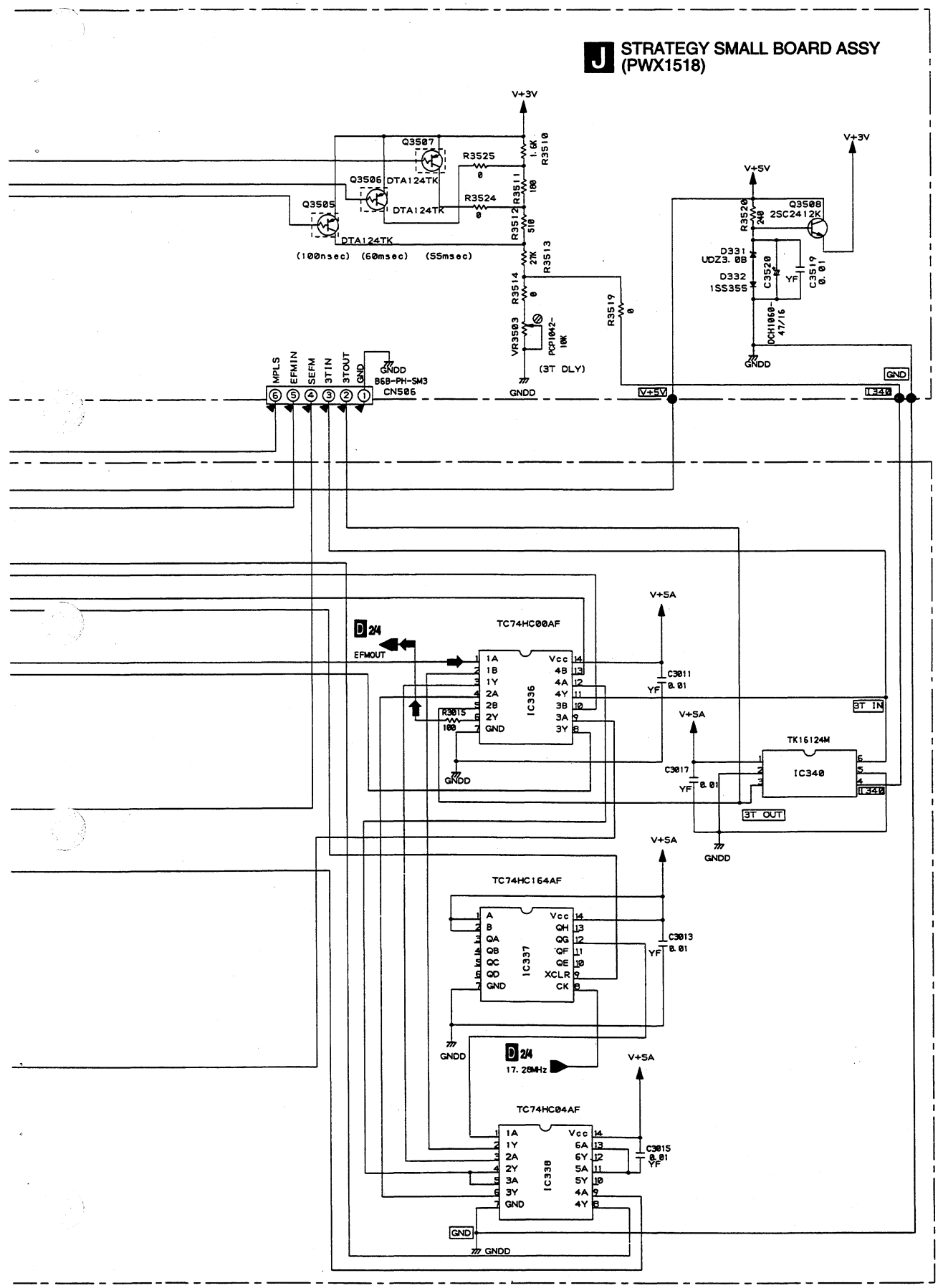
J STRATEGY SMALL BOARD ASSY
(PWX1518)
V+3V
Q3507
R3525
0
R3510
1.6K
Q3506 DTA124TK
R3524
0
R3511
100
Q3505
DTA124TK
DTA124TK
R3512
510
(100nsec) (60msec) (55msec)
R3513
27K
R3514
0
VR3503
PCP1042-
10K
(3T DLY)
GNDD
R3519
0
V+3V
V+5V
R3520
240
Q3508
2SC2412K
D331
UDZ3.0B
D332
1SS355
C3520
YF
C3519
0.01
DCH1060-
47/16
GNDD
MPLS
EFMIN
SEFM
3TIN
3TOUT
GND
GNDD
B6B-PH-SM3
CN506
V+5V
GND
I340
D 2/4
EFMOUT
TC74HC00AF
IC336
1A
1B
1Y
2A
2B
2Y
GND
Vcc
4B
4A
4Y
3B
3A
3Y
R3015
100
GNDD
V+5A
C3011
YF
0.01
3T IN
V+5A
TK16124M
IC340
C3017
YF
0.01
3T OUT
GNDD
V+5A
TC74HC164AF
IC337
A
B
QA
QB
QC
QD
GND
Vcc
QH
QG
QF
QE
XCLR
CK
C3013
YF
0.01
GNDD
D 2/4
17.28MHz
V+5A
TC74HC04AF
IC338
1A
1Y
2A
2Y
3A
3Y
GND
Vcc
6A
6Y
5A
5Y
4A
4Y
C3015
0.01
YF
GND
GNDD

PDR-04

3.5 AUDIO DIGITAL BOARD ASSY (2/4)

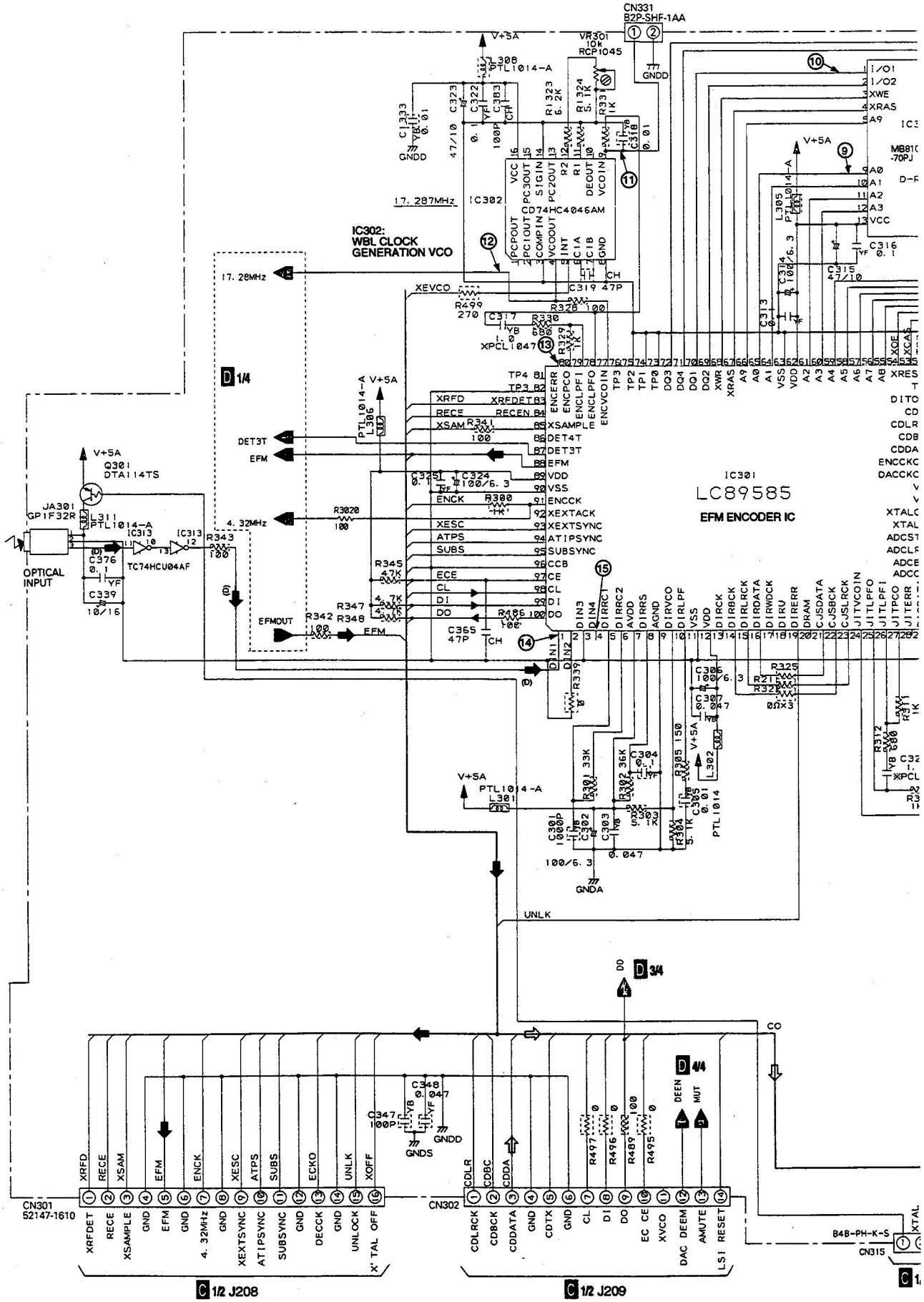

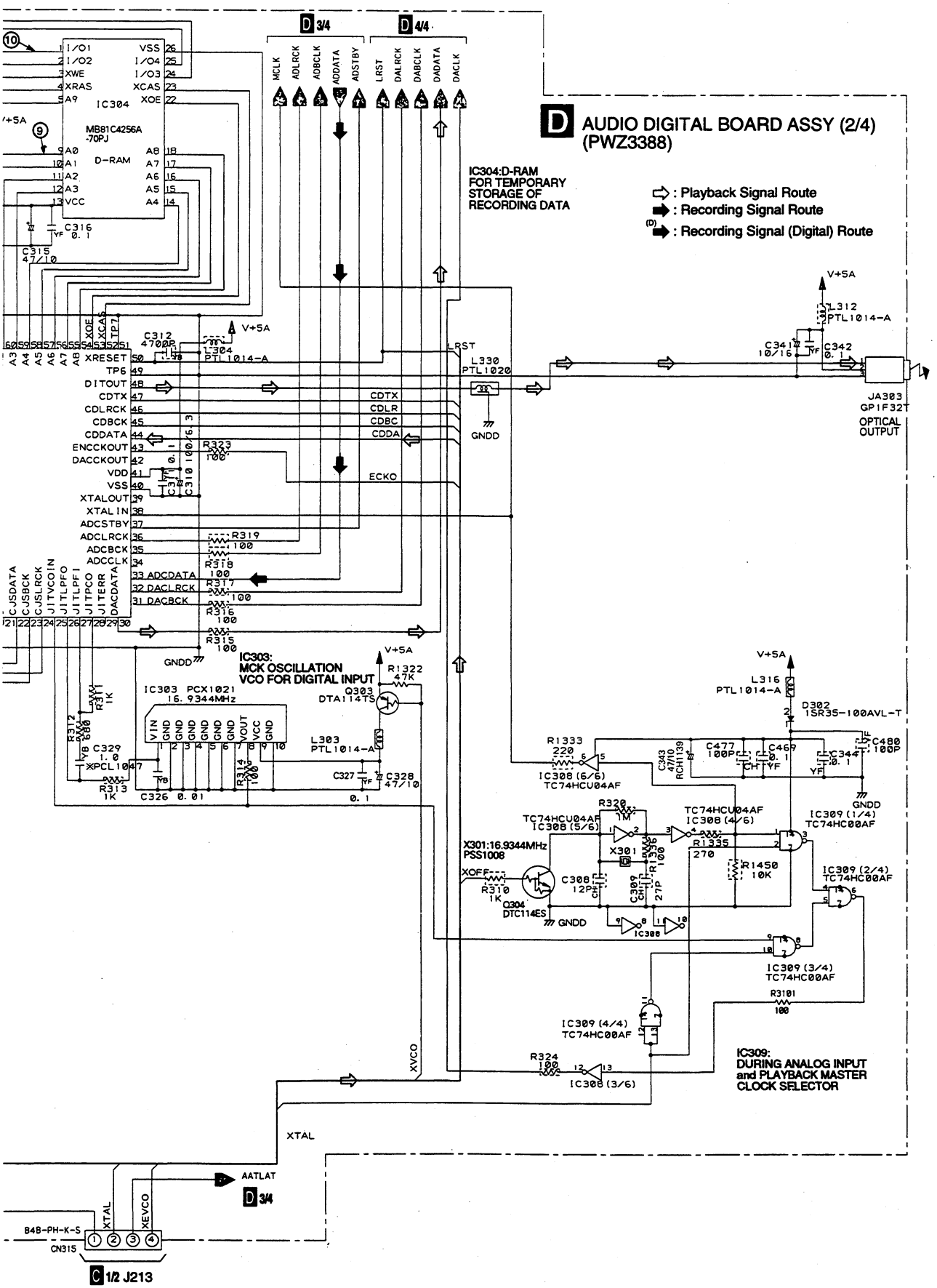
D AUDIO DIGITAL BOARD ASSY (2/4)
(PWZ3388)
IC304:D-RAM
FOR TEMPORARY
STORAGE OF
RECORDING DATA
: Playback Signal Route
: Recording Signal Route
(D) : Recording Signal (Digital) Route
IC304
MB81C4256A
-70PJ
D-RAM
D 3/4
D 4/4
MCLK
ADLRCK
ADBCLK
ADDATA
ADSTBY
LRST
DALRCK
DABCLK
DADATA
DACLK
V+5A
XRESET
TP6
DITOUT
CDTX
CDLRCK
CDBCK
CDDATA
ENCCKOUT
DACCKOUT
VDD
VSS
XTALOUT
XTALIN
ADCSTBY
ADCLRCK
ADCBCK
ADCCLK
ADCDATA
DACLRCK
DACBCK
CDTX
CDLR
CDBC
CDDA
ECKO
L330
PTL1020
GNDD
JA303
GP1F32T
OPTICAL
OUTPUT
L312
PTL1014-A
L304
PTL1014-A
L316
PTL1014-A
L303
PTL1014-A
IC303:
MCK OSCILLATION
VCO FOR DIGITAL INPUT
IC303 PCX1021
16.9344MHz
Q303
DTA114TS
IC308 (6/6)
TC74HCU04AF
IC308 (5/6)
IC308 (4/6)
IC309 (1/4)
TC74HC00AF
IC309 (2/4)
IC309 (3/4)
IC309 (4/4)
X301:16.9344MHz
PSS1008
X301
Q304
DTC114ES
XOFF
IC308
IC308 (3/6)
XVCO
XTAL
AATLAT
D 3/4
B4B-PH-K-S
CN315
C 1/2 J213
IC309:
DURING ANALOG INPUT
and PLAYBACK MASTER
CLOCK SELECTOR

3.6 AUDIO DIGITAL BOARD ASSY (3/4) AND ALC BOARD ASSY

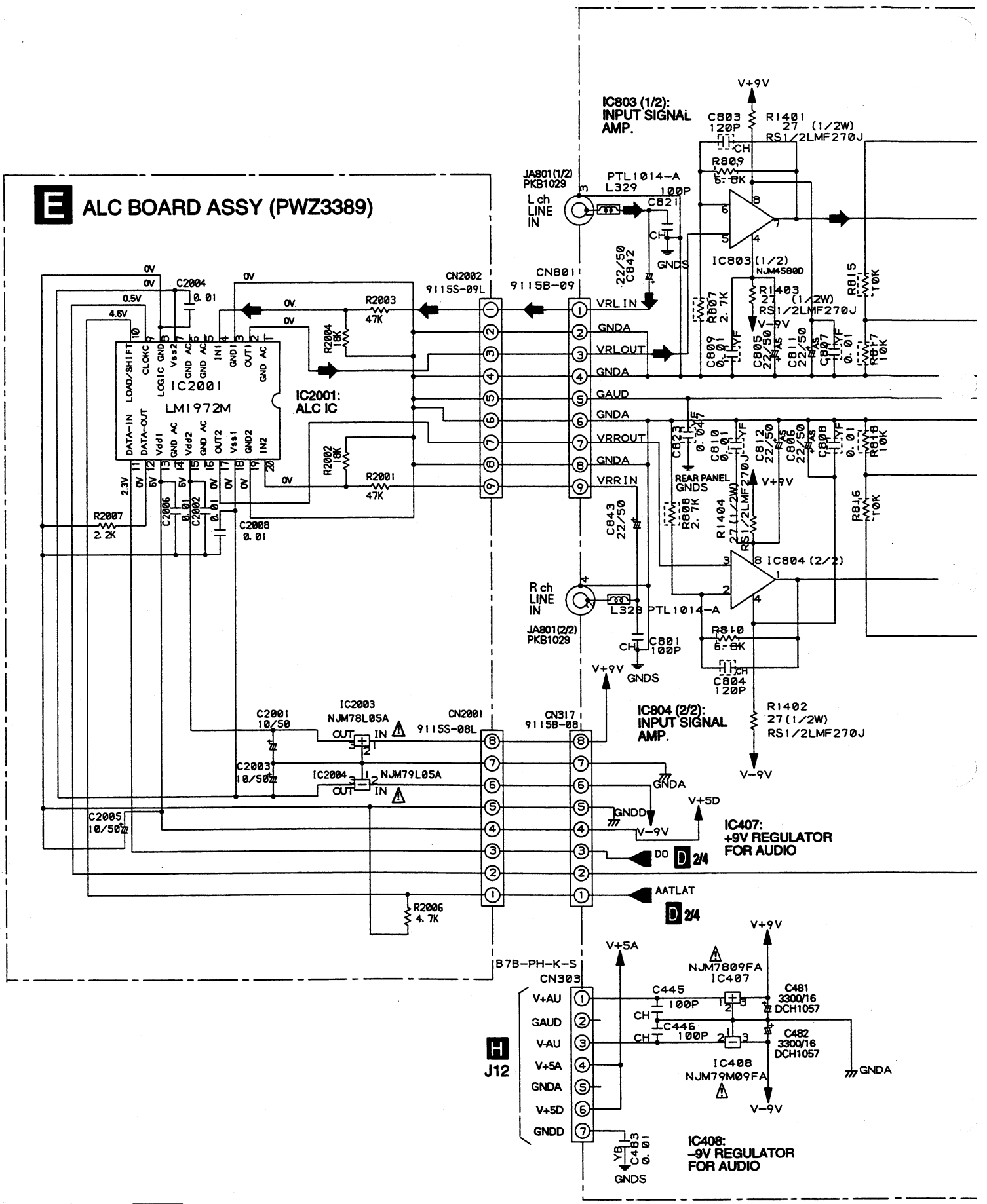

D AUDIO DIGITAL BOARD ASSY (3/4) (PWZ3388)

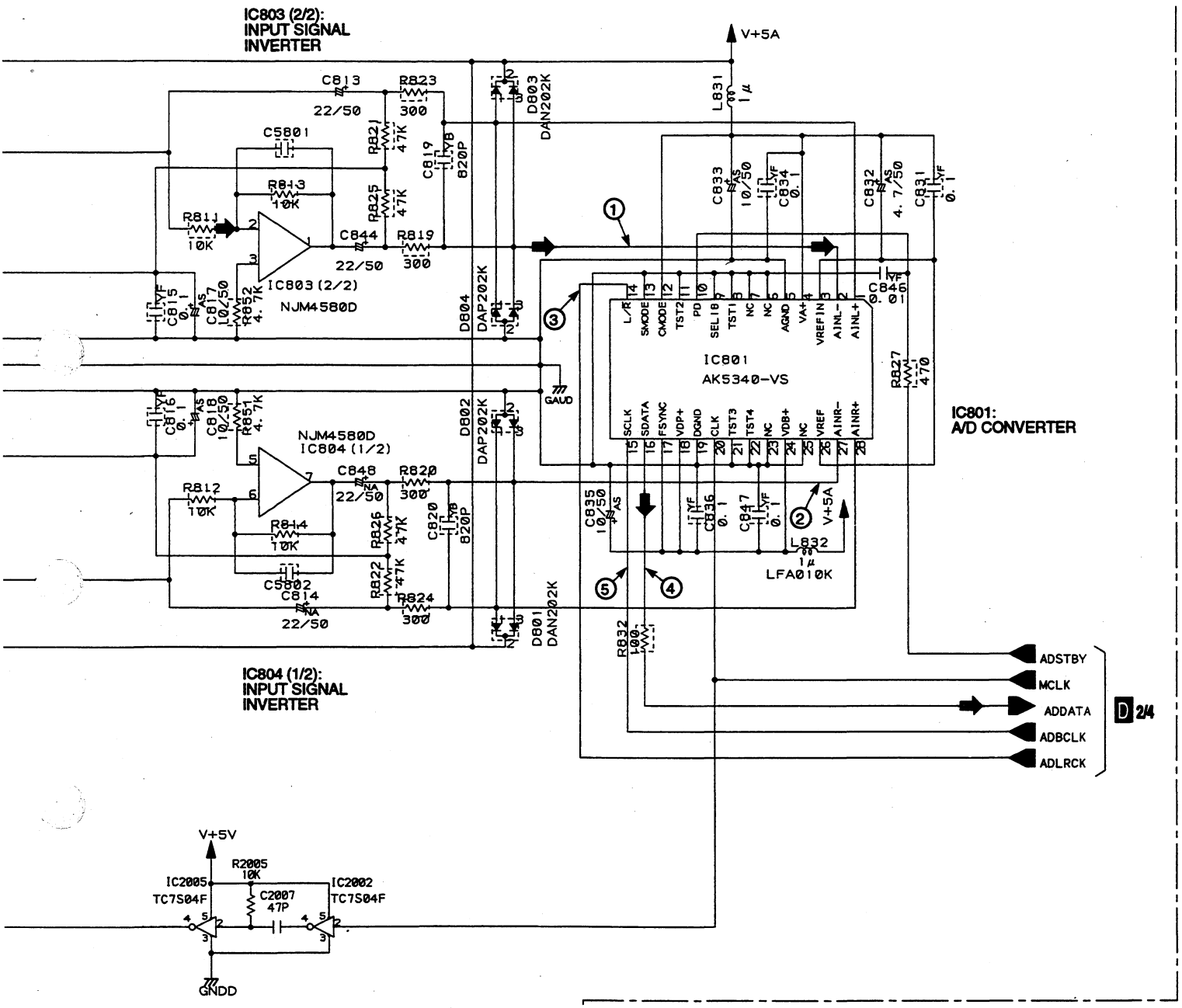

3.7 AUDIO DIGITAL BOARD ASSY (4/4), SERVO UCOM BOARD ASSY (2/2) AND HEADPHONE BOARD ASSY

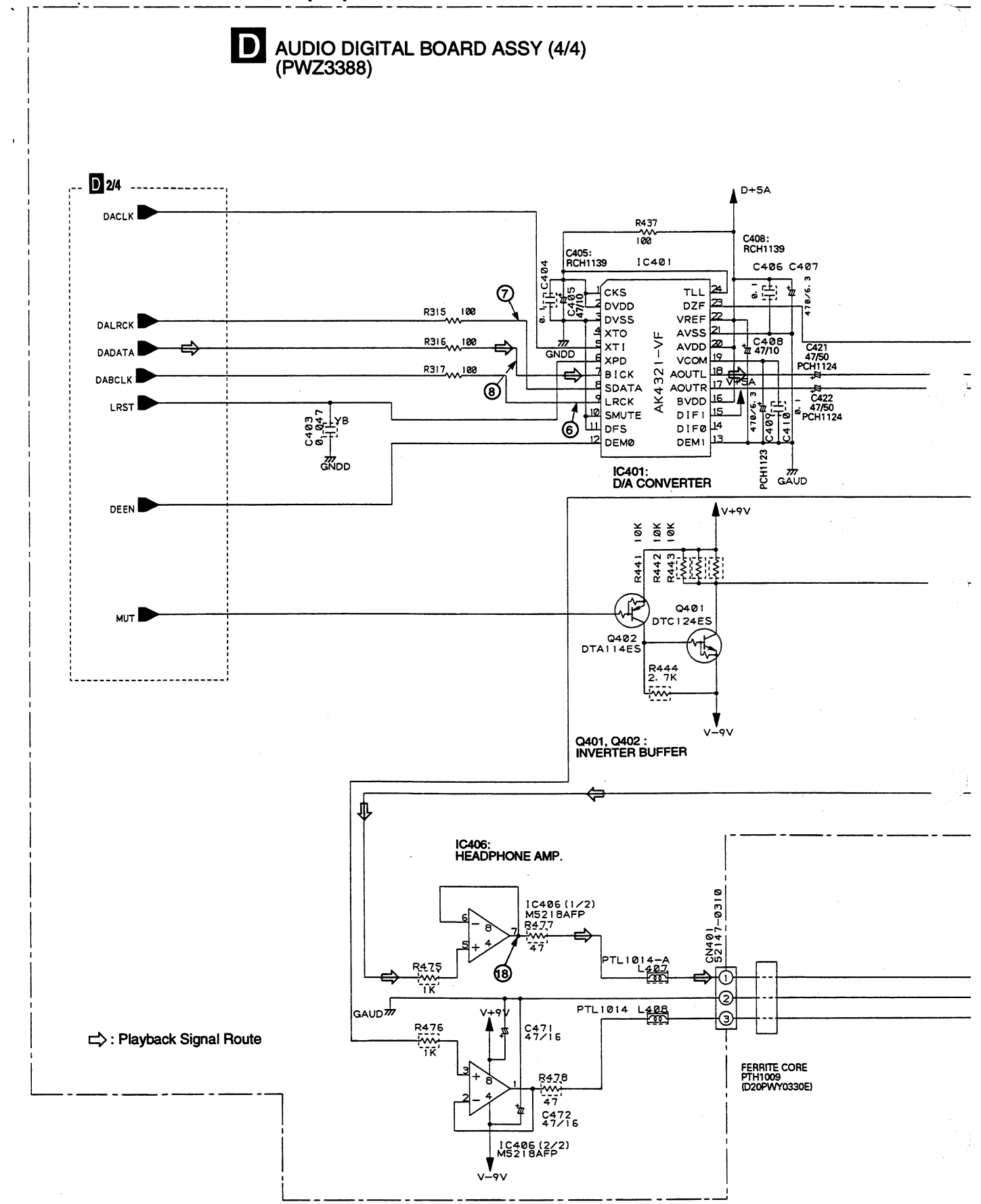

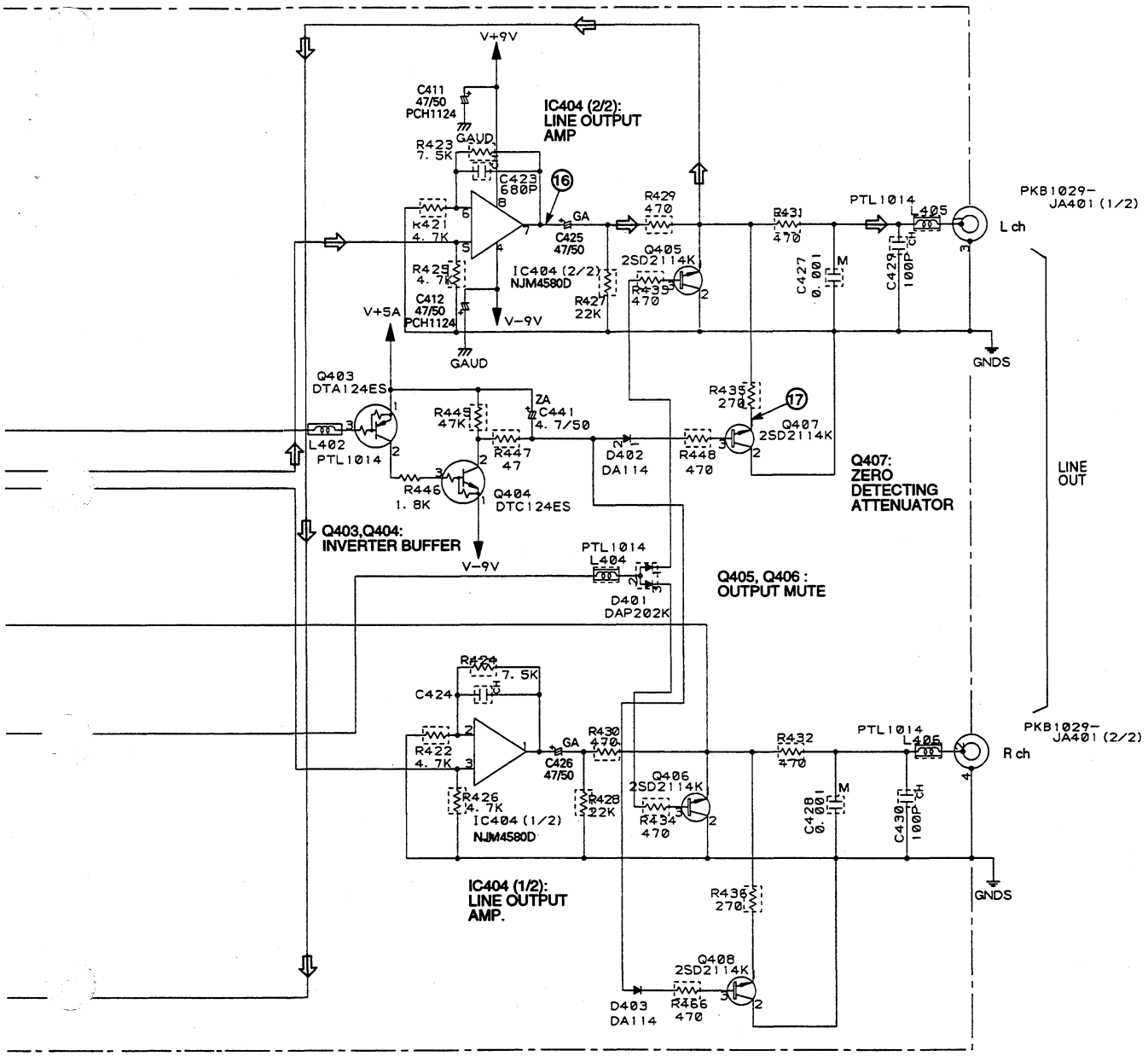

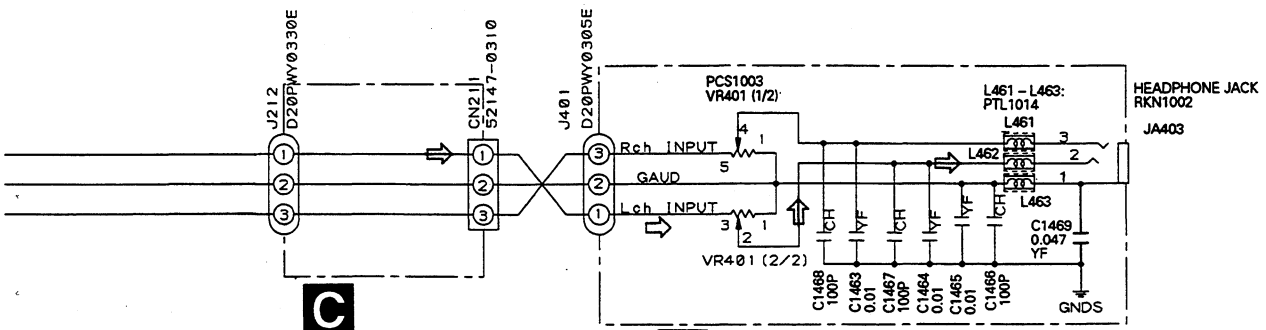

C SERVO UCOM BOARD ASSY (2/2) (PWZ3387)

F HEADPHONE BOARD ASSY (PWZ3390)

3.8 FUNCTION, POWER A AND POWER B BOARD ASSEMBLIES

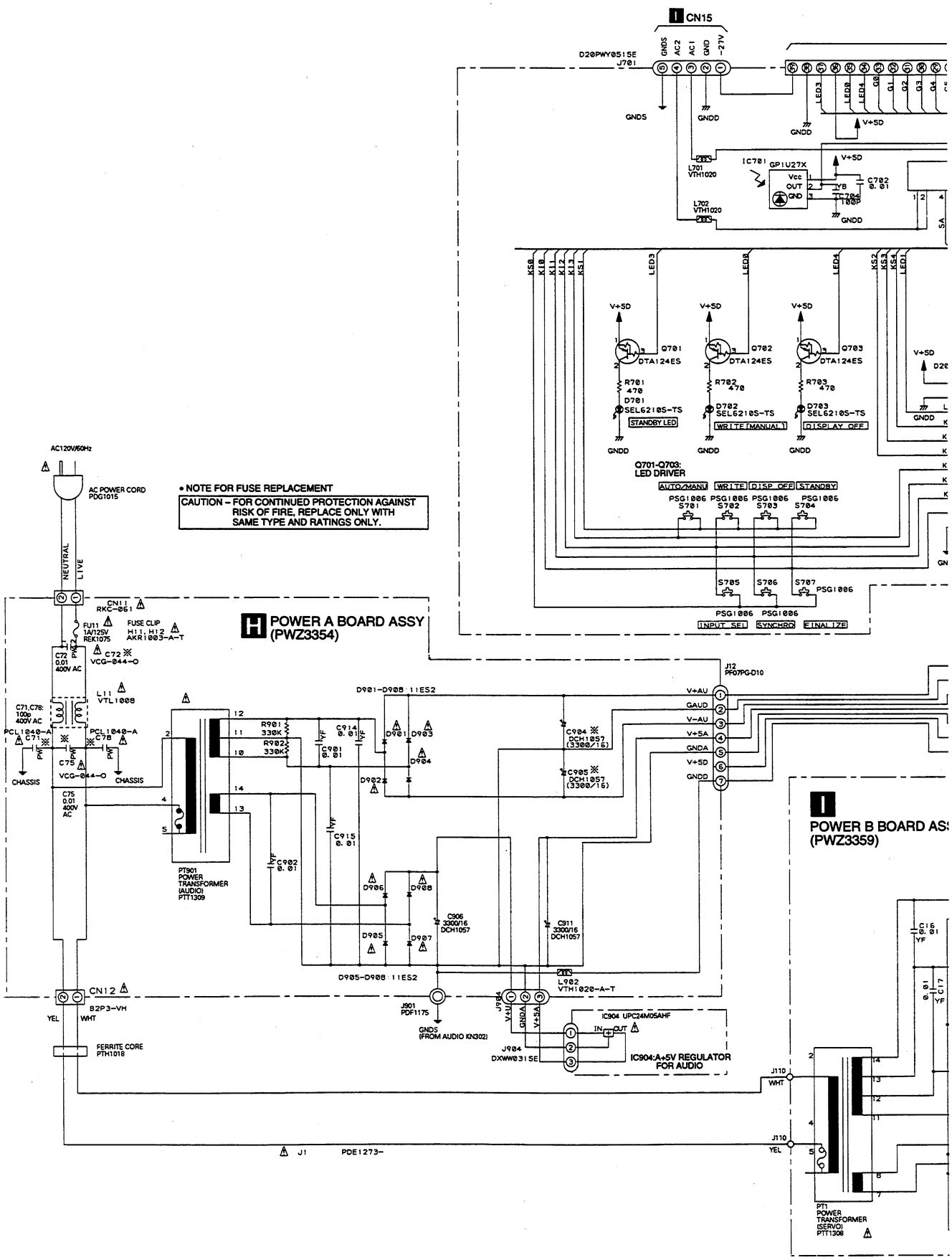

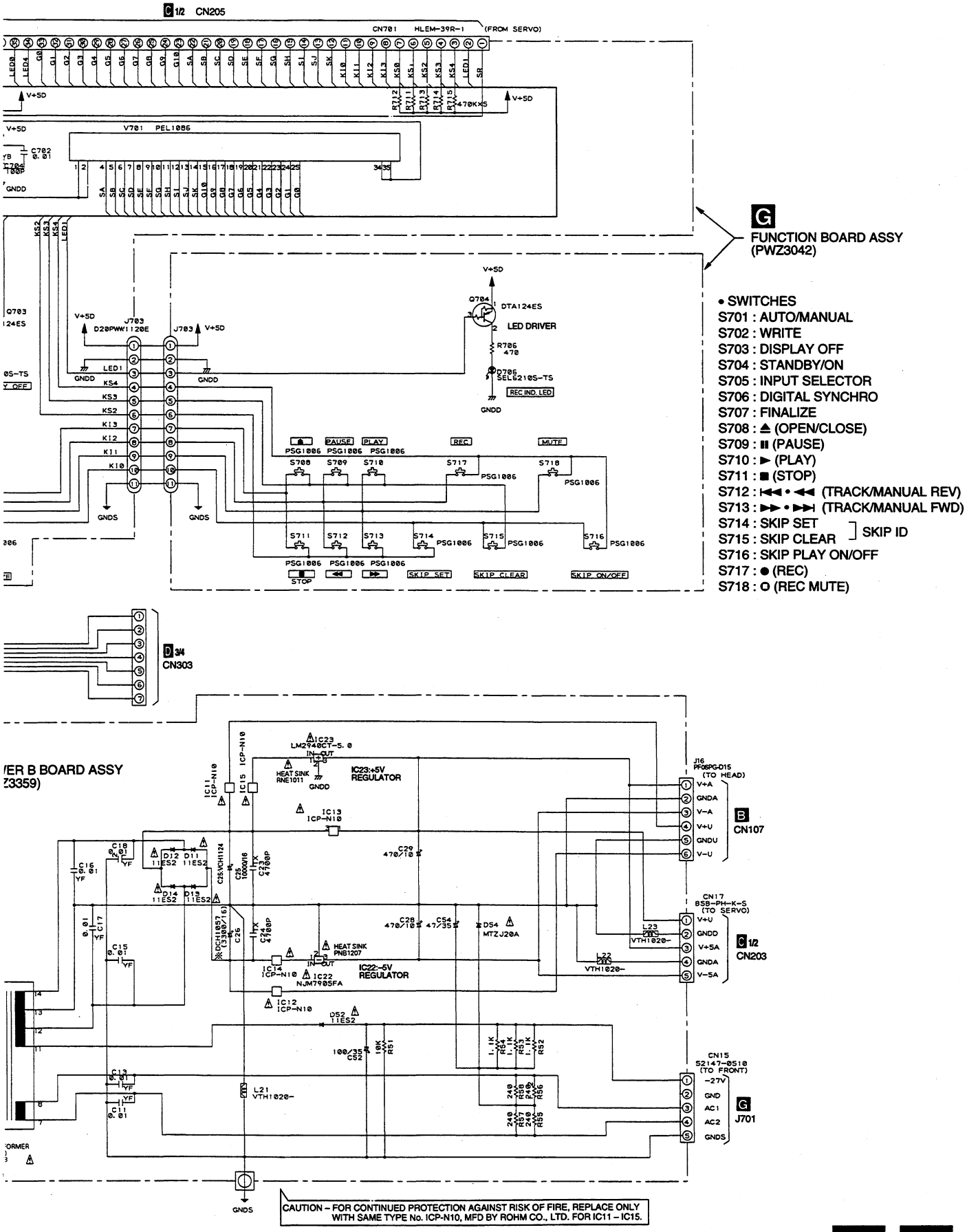
C 1/2 CN205
CN701 HLEM-39R-1 (FROM SERVO)
V701 PEL1086
G
FUNCTION BOARD ASSY
(PWZ3042)
• SWITCHES
S701 : AUTO/MANUAL
S702 : WRITE
S703 : DISPLAY OFF
S704 : STANDBY/ON
S705 : INPUT SELECTOR
S706 : DIGITAL SYNCHRO
S707 : FINALIZE
S708 : ▲ (OPEN/CLOSE)
S709 : ▮▮ (PAUSE)
S710 : ▶ (PLAY)
S711 : ■ (STOP)
S712 : ▮◀◀ • ◀◀ (TRACK/MANUAL REV)
S713 : ▶▶ • ▶▶▮ (TRACK/MANUAL FWD)
S714 : SKIP SET
S715 : SKIP CLEAR] SKIP ID
S716 : SKIP PLAY ON/OFF
S717 : ● (REC)
S718 : O (REC MUTE)
D 3/4
CN303
IC23:+5V REGULATOR
IC22:-5V REGULATOR
B
CN107
C 1/2
CN203
G
J701
CAUTION – FOR CONTINUED PROTECTION AGAINST RISK OF FIRE, REPLACE ONLY WITH SAME TYPE No. ICP-N10, MFD BY ROHM CO., LTD. FOR IC11 – IC15.

3.9 WAVEFORMS AND VOLTAGES

B HEAD BOARD ASSY

• Waveforms and voltages of HEAD BOARD ASSY

• Measuring condition : DC input unless otherwise noted.

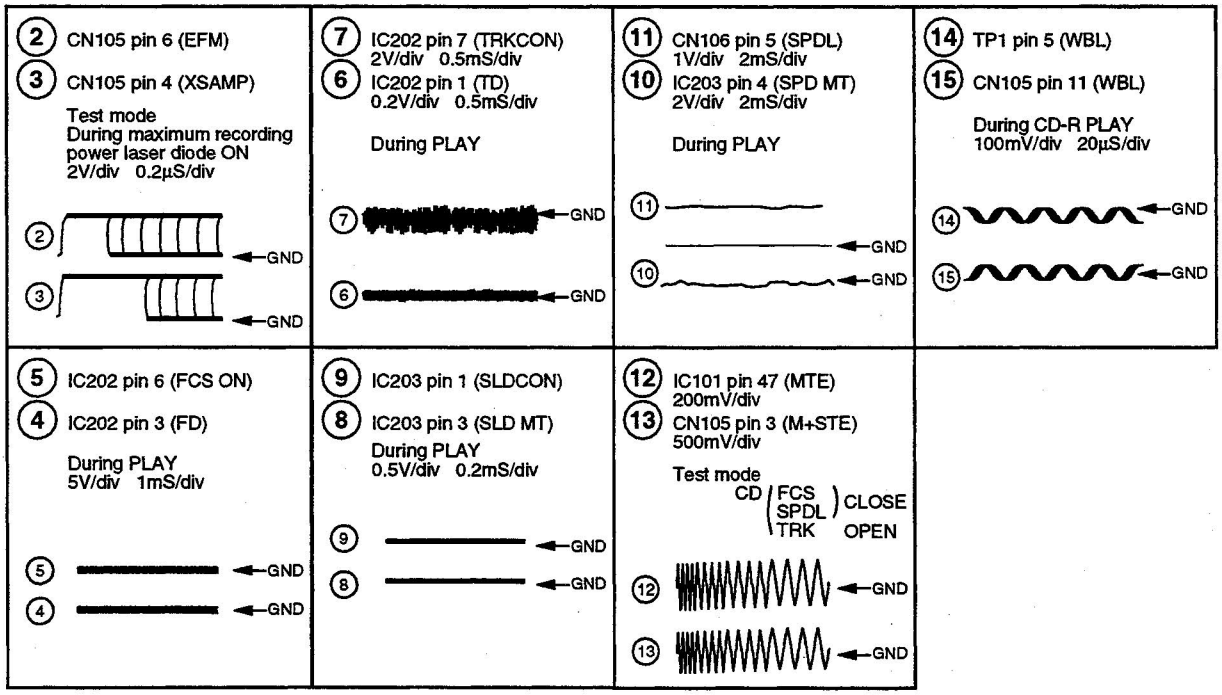

IC101 (PA4022A) [V]

Pin No.	MODE			Pin No.	MODE		
	STOP	PLAY	REC		STOP	PLAY	REC
1	0.01	–	-0.1	35	0.6	0.6	0.8
2	0.02	-0.12	-0.4	36	0.6	0.6	0.8
3	0	-0.16	0	37	1.2	1.2	1.5
4	-4.9	-4.9	-4.9	38	0.1	0.1	3.1
5	0	0	0	39	5.0	0	0
6	0	0	0	40	0	0	-0.1
7	0	0	0	41	0	0	0
8	0	0	0	42	0	0	0
9	0	0	0	43	0	0	0.1
10	0	0	0	44	0	-0.1	-0.1
11	0	0	0	45	-4.9	-4.9	-4.9
12	0	0	0	46	0	-0.1	-0.1
13	0	0	0	47	0	0	0
14	0	0	0	48	0	0	0
15	0	0	0	49	0	0	0
16	0	0	–	50	0	0	0
17	0	0	0	51	0	0	0
18	0	0	0	52	0	-0.1	0
19	0	0	0	53	0	-0.1	-0.1
20	0	0	0	54	0	0.2	0.2
21	0	0	0	55	0	0	0
22	0	0	0	56	0	0	0
23	1.4	1.4	1.4	57	0.1	0.1	0.1
24	1.4	1.4	1.4	58	-4.0	-4.0	-4.0
25	0	0	0.9	59	-2.9	-2.7	-2.7
26	0	0.2	0.2	60	0	0	0
27	0	0	1.2	61	0	0	0
28	0	0	0	62	0	0	0
29	5.0	5.0	5.0	63	5.0	5.0	5.0
30	4.2	1.2	1.2	64	-0.1	0.3	0.3
31	-3.4	-1.7	-1.7	65	0	-0.1	0
32	0	0	0	66	-0.3	1.4	1.2
33	-1.0	0	0	67	0	0	0
34	4.3	3.6	3.6	68	-0.1	0	0

IC102 (BA4560F) [V]

Pin No.	MODE		
	STOP	PLAY	REC
1	0	0.2	1.5
2	1.4	1.4	1.5
3	4.4	1.4	1.4
4	-5.0	-5.0	-5.0
5	0	0	0
6	0	0	0
7	0	0	0.1 to 0.6
8	5	5	5

IC103 (TC7S08F) [V]

Pin No.	MODE		
	STOP	PLAY	REC
1	0	0	0
2	0	0	2.0
3	0	–	–
4	0	0	2.0
5	5	–	–

IC104 (BA4560F) [V]

Pin No.	MODE		
	STOP	PLAY	REC
1	0	-0.1	-0.2
2	0	-0.1	-0.1
3	0	-0.1	-0.1
4	-5.0	–	–
5	0	0	0
6	0	0	0
7	0	0	0
8	5.0	–	–

IC202 (LA6517) [V]

Pin No.	MODE		
	STOP	PLAY	REC
1	0	0	0
2	9.4	–	–
3	-0.4	-0.4	-0.4
4	-10.0	–	–
5	-0.4	-0.4	-0.4
6	-0.4	-0.4	-0.4
7	0	0	0
8	0	0	0

IC203 (LA6520) [V]

Pin No.	MODE		
	STOP	PLAY	REC
1	0.01	0.01	0 to 0.2
2	0.01	0.3	0.1 to 0.4
3	0	0.3	0.2 to 0.3
4	0.04	-0.1	-0.5 to -0.7
5	2.2	2.2	2.2
6	2.2	2.2	2.2
7	0	0	0
8	0	0	0
9	0	0	0
10	–	–	–
11	–	–	–
12	9.4	–	–
FIN	-10.0	–	–

Q101 (2SC2412K) [V]

Pin No.	MODE		
	STOP	PLAY	REC
E	0.6	0.6	0.8
C	–	–	–
B	1.2	1.2	1.4

Q102 (2SB1189) [V]

Pin No.	MODE		
	STOP	PLAY	REC
E	5.0	5.0	4.5
C	1.5	1.5	1.8
B	4.3	3.8	3.8

Q103 (2SA1037K) [V]

Pin No.	MODE		
	STOP	PLAY	REC
E	5.0	5.0	4.8
C	1.0	1.0	2.2
B	–	–	–

Q104 (2SA1037K) [V]

Pin No.	MODE		
	STOP	PLAY	REC
E	5.0	5.0	4.8
C	1.0	1.0	2.2
B	–	–	–

Q106 (2SA1037K) [V]

Pin No.	MODE		
	STOP	PLAY	REC
E	5.0	5.0	4.8
C	–	–	–
B	–	–	–

Q109 (DTC114TS) [V]

Pin No.	MODE		
	STOP	PLAY	REC
E	0	–	–
C	0	1.1	1.2
B	5.0	0	0

Q105 (2SA1037K) [V]

Pin No.	MODE		
	STOP	PLAY	REC
E	5.0	5.0	4.8
C	1.0	1.0	2.2
B	–	–	–

Q107 (2SA1461) [V]

Pin No.	MODE		
	STOP	PLAY	REC
E	–	–	–
C	1.5	1.5	1.8
B	3.0	3.0	3.0

Q111 (DTA114TK) [V]

Pin No.	MODE		
	STOP	PLAY	REC
E	5.0	–	–
C	0	0	4.4
B	5.0	0	0

C SERVO UCOM BOARD ASSY

• Waveforms and voltages of SERVO UCOM BOARD ASSY

• Measuring condition : DC input unless otherwise noted.

① J201 pin 10 (HF)
② CN204 pin 1 (RF)
During CD PLAY
500mV/div 0.5µS/div

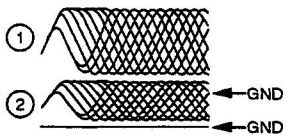

⑤ IC205 pin 63 (MIRR) 2V/div
② CN204 pin 1 (RF) 0.5V/div
During manual search
0.5mS/div

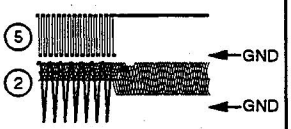

⑨ IC356 pin 48 (SPSP) 2V/div
⑩ IC205 pin 13 (CLV) 10V/div
⑪ IC205 pin 14 (ECLV) 10V/div
In the test mode (FCS ON, SPDL ON (CD), TRK OPEN)
20µS/div

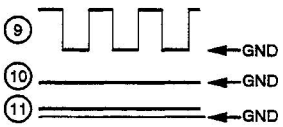

① J201 pin 10 (HF)
⑲ IC356 pin 23 (RFT)
⑳ IC356 pin 24 (RFB)
During CD-R PLAY
(in common with GND of ⑳ and ⑲)
1V/div 1mS/div

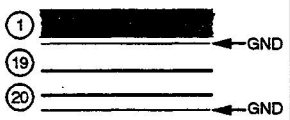

③ CN204 pin 2 (TE)
Test mode
TRK, CLOSE state
Top : FILTER exist
Bottom : FILTER none
500mV/div 0.5mS/div

⑥ IC206 pin 4 (MDP) 2V/div
⑩ IC205 pin 13 (CLV) 10V/div
⑪ IC205 pin 14 (ECLV) 10V/div
During CD PLAY
20µS/div

⑫ IC205 pin 19 (FGIN)
⑬ IC205 pin 17 (FGOUT)
In the test mode
(FCS ON, SPDL ON (CD), TRK OPEN)
2V/div 2mS/div

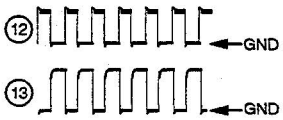

㉑ J209 pin 5 (DOUT) 5V/div
㉒ J208 pin 13 (MCK) 2V/div
During CD PLAY
0.1µS/div

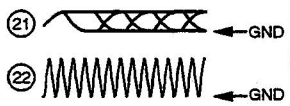

③ CN204 pin 2 (TE)
Test mode (FSC, SPDL ON, TRK, OPEN state)
Top : FILTER exist
Bottom : FILTER none
500mV/div 0.5mS/div

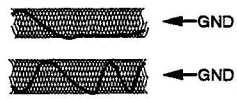

⑦ IC207 pin 4 (MDP) 2V/div
⑩ IC205 pin 13 (CLV) 10V/div
⑪ IC205 pin 14 (ECLV) 10V/div
During CD-R REC
20µS/div

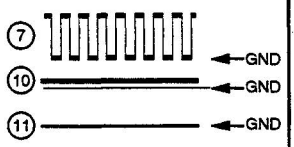

⑭ IC206 pin 34 (DATA)
⑮ IC206 pin 32 (LRCK)
⑯ IC206 pin 35 (BCLK)
During CD PLAY (1kHz 0dB)
10V/div 2µS/div

④ CN204 pin 6 (FE)
Test mode
TRK, CLOSE state
0.5V/div 2mS/div

⑧ IC205 pin 9 (SPDLO) 1V/div
⑩ IC205 pin 13 (CLV) 10V/div
⑪ IC205 pin 14 (ECLV) 10V/div
During STOP
20µS/div

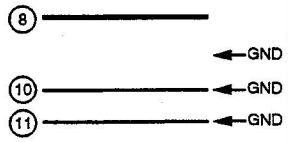

⑰ J201 pin 11 (WBL) 50mV/div
⑱ IC207 pin 1 (WBL) 2V/div
During CD-R PLAY
20µS/div

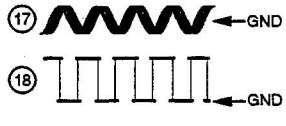

PDR-04

IC201 (CXA1372Q) [V]

Pin No.	MODE			Pin No.	MODE		
	STOP	PLAY	REC		STOP	PLAY	REC
1	0	0	0	25	4.9	4.9	0
2	0	0	0	26	0.1	0.1	1.2
3	0	0	0	27	0.8	1.5	1.9
4	0	0	0	28	0	0	0
5	-0.4	-0.4	-0.4	29	0	0	3.7
6	0	0	0	30	-4.9	-4.9	-4.9
7	0.3	0.3	0.3	31	2.5	2.5	2.5
8	0	0	0	32	2.6	2.6	2.8
9	0	0	0	33	0.1	5.0	5.0
10	5.0	5.0	5.0	34	1.4	-1.1	-4.8
11	0	0	0	35	-1.0	-1.4	-4.8
12	0	0	0	36	5.0	5.0	5.0
13	0	0	0	37	0	-0.4	-4.0
14	0	0.3	0.3	38	-4.0	-3.2	-1.9
15	0	0	0	39	0	0	0
16	-4.0	-4.0	-4.0	40	-0.1	0.1	3.9
17	1.3	1.3	1.3	41	-4.9	-4.9	-4.9
18	0	0	0	42	0	0	0
19	-4.0	-4.9	-4.9	43	0	0	0
20	5.0	5.0	5.0	44	0	0	0
21	5.0	5.0	5.0	45	0	0	0
22	4.8	4.9	5.0	46	0	0	0
23	5.0	5.0	5.0	47	0.2	0	0
24	0.7	0.7	0.7	48	0.2	0	0

IC205 (PA9004A) [V]

Pin No.	MODE			Pin No.	MODE		
	STOP	PLAY	REC		STOP	PLAY	REC
1	5.0	5.0	5.0	33	3.9	3.9	3.9
2	2.5	2.4	2.5	34	0	0	0
3	3.1	3.1	2.5	35	0.6	0.6	0.6
4	0.8	0.8	2.3	36	0.1	0.1	0.1
5	0.8	0.8	2.3	37	0	0	0
6	2.5	2.5	2.5	38	0	0	0
7	2.5	2.4	1.8	39	0	0	0
8	2.5	2.5	2.5	40	0	0	0
9	2.4	2.6	2.6	41	0	0	0
10	2.5	2.5	2.5	42	0	0	0
11	0	0	0	43	0	0	0
12	2.4	2.4	2.4	44	0	0	0
13	0	4.9	4.9	45	5.0	2.4	2.4
14	0	4.9	0	46	0	0	0
15	2.5	2.5	2.6	47	1.6	0.9	1.2
16	0	0	0	48	1.6	2.6	1.2
17	5.0	2.8	2.8	49	1.6	2.6	1.9
18	-4.0	-4.0	-4.0	50	1.6	2.6	1.9
19	0	3.3	3.3	51	1.6	1.6	1.6
20	0	0	0	52	-0.3	1.4	1.8
21	0	0	0	53	-4.0	-4.0	-4.0
22	0	0	5.0	54	0.3	1.4	2.3
23	0	0	5.0	55	-1.0	1.5	1.3
24	0	0	0	56	-0.3	1.9	1.9
25	1.0	1.0	1.4	57	0	0	0
26	5.0	5.0	5.0	58	-0.8	-0.6	-0.8
27	0	5.0	0	59	0	0.9	0.3
28	0	0	0	60	0.4	0.4	0.4
29	0	0	0	61	5.0	0	5.0
30	0	0	0	62	1.7	0.4	1.7
31	0	0	0	63	5.0	5.0	2.8
32	0	0	0	64	3.9	3.9	3.9

IC206 (CXD2500BQ) [V]

Pin No.	MODE			Pin No.	MODE		
	STOP	PLAY	REC		STOP	PLAY	REC
1	0.1	4.9	4.8	41	1.1	1.1	1.1
2	0	0.2	0.6	42	0	5.0	5.0
3	0	5.0	5.0	43	2.5	2.5	2.5
4	2.4	2.5	3.8	44	5.0	0	0
5	0.1	0.2	0.6	45	0	5.0	5
6	0	5.0	5.0	46	4.3	4.4	4.4
7	0.1	0.2	0.6	47	3.3	0	0
8	5.0	5.0	5.0	48	3.3	0	0
9	0	0	0	49	0	0	0
10	0	0	0	50	1.2	1.2	1.2
11	0.1	0.2	0.6	51	1.2	1.2	1.2
12	0	0	0	52	0	0	0
13	0.1	0.2	0.6	53	2.1	2.1	2.1
14	0.1	0.2	0.6	54	2.8	2.7	2.7
15	0.1	0.2	0.3	55	0	0	0
16	5.0	5.0	5.0	56	2.8	2.7	2.7
17	0	0	0	57	1.0	1.0	1.0
18	2.6	2.6	2.6	58	2.1	2.1	2.1
19	2.5	2.5	2.5	59	5.0	5.0	5.0
20	2.5	2.5	2.5	60	2.1	2.1	2.1
21	0	0	0	61	0	0	0
22	2.6	2.6	2.6	62	2.5	2.5	2.5
23	5.0	5.0	5.0	63	0	0.1	0.1
24	2.6	2.6	2.8	64	1.5	0.1	0.1
25	0	0.1	0.4	65	0	0	0
26	0	0	0	66	0	4.6	4.7
27	2.5	2.5	2.5	67	4.9	4.9	4.9
28	0	0	0	68	0	0	0
29	0	0.1	0.4	69	0.1	2.7	2.8
30	0	0	0	70	4.9	4.9	4.9
31	2.5	2.5	2.5	71	0.7	0.6	0.7
32	0	0.1	2.5	72	4.9	4.9	4.9
33	5.0	5.0	5.0	73	5.0	5.0	5.0
34	0	1.2	0	74	4.8	4.9	4.9
35	1.9	1.9	1.9	75	0.9	1.4	1.7
36	0	1.2	0	76	0.8	0.1	1.7
37	1.9	1.9	1.9	77	0.7	0.6	0.7
38	2.5	2.5	2.5	78	5.0	5.0	5.0
39	5.0	0	0	79	4.8	4.9	4.9
40	5.0	5.0	5.0	80	0.9	0.1	1.8

IC207 (PDJ006A) [V]

Pin No.	MODE			Pin No.	MODE		
	STOP	PLAY	REC		STOP	PLAY	REC
1	0.1	2.3	2.1	41	4.9	5.0	4.9
2	5.0	0	2.8	42	5.0	5.0	5.0
3	0.1	0	0.1	43	5.0	5.0	5.0
4	5.0	5.0	2.5	44	5.0	5.0	5.0
5	0	0	0	45	0	0	0
6	0.3	0	0.2	46	0	0	0
7	0	0	0	47	0	0	0
8	0	0	0	48	0	0	0
9	5.0	5.0	5.0	49	0	0	0
10	0.1	0.1	0.2	50	0	0	0
11	5.0	5.0	5.0	51	0	0	0
12	5.0	5.0	5.0	52	0	0	0
13	2.4	0	2.4	53	0	0	0
14	4.9	4.9	4.9	54	0	0	0
15	0	0	5.0	55	0	0	0
16	0	0	5.0	56	0	0	0
17	0	5.0	5.0	57	0	0	0
18	5.0	5.0	5.0	58	5.0	5.0	5.0
19	0.1	0.1	0.4	59	1.9	1.6	2.5
20	4.9	4.9	–	60	5.0	5.0	5.0
21	4.9	4.9	4.9	61	0	0	0
22	4.9	4.9	4.9	62	0	0	0
23	1.6	0.9	1.3	63	0	5.0	5.0
24	3.3	2.4	2.2	64	0	5.0	0
25	3.6	3.3	2.2	65	5.0	0	0
26	4.1	3.2	3.5	66	5.0	5.0	5.0
27	1.1	0.9	1.1	67	5.0	5.0	5.0
28	0	0	0	68	0	0	0
29	1.4	1.0	1.7	69	5.0	0	5.0
30	0.5	0.7	0.8	70	5.0	0	0
31	4.7	4.7	4.7	71	0	5.0	5.0
32	2.8	3.4	3.1	72	0	0	0
33	3.0	3.1	3.3	73	0	0	0
34	3.2	3.2	2.8	74	0	0	0
35	3.2	3.4	2.9	75	0	0	0
36	1.8	1.8	2.5	76	0	0	0
37	3.4	3.2	3.4	77	0	0	0
38	5.0	5.0	5.0	78	5.0	5.0	5.0
39	1.2	1.4	1.3	79	0	0	0
40	2.9	2.6	3.3	80	0	0	0

IC208 (LM2940CT-5.0) [V]

Pin No.	MODE		
	STOP	PLAY	REC
U	9.3	–	–
G	0	–	–
+5	5.0	–	–

IC311 (PST529C) [V]

Pin No.	MODE		
	STOP	PLAY	REC
1	5.0	5.0	5.0
2	0	0	0
3	5.0	5.0	5.0

IC204 (HD74HC4053FP) [V]

Pin No.	MODE		
	STOP	PLAY	REC
1	0	0	0
2	0	0	0
3	0.9	1.5	1.9
4	0.9	0.1	9
5	0.1	0.1	1.3
6	0	0	0
7	0	0	0
8	0	0	0
9	5.0	0	5.0
10	0	0	0
11	0	4.9	0.2
12	5.0	5.0	5.0
13	0	5.0	5.0
14	5.0	5.0	5.0
15	0	0	0
16	5.0	5.0	5.0

IC352 (LH5116NA-10) [V]

Pin No.	MODE		
	STOP	PLAY	REC
1	2.8	2.7	2.7
2	0.7	1.4	1.1
3	3.8	3.3	3.7
4	2.7	2.0	2.5
5	4.0	3.4	3.7
6	3.6	3.0	2.6
7	3.2	2.5	2.6
8	1.5	0.9	1.1
9	2.7	3.3	3.1
10	3.0	3.1	3.3
11	3.2	3.1	3.0
12	0	0	0
13	3.3	3.4	3.2
14	1.8	1.8	2.0
15	3.4	3.3	3.4
16	1.2	1.5	1.4
17	2.9	2.7	2.8
18	4.5	4.5	4.5
19	0.9	0.8	1.1
20	4.9	4.9	4.9
21	4.9	4.9	4.9
22	2.7	2.5	2.5
23	2.8	2.8	2.9
24	4.6	4.6	4.5

IC353 (HD74HC573FP) [V]

Pin No.	MODE		
	STOP	PLAY	REC
1	0	0	0
2	2.7	3.4	3.1
3	3.0	3.2	3.4
4	3.2	3.2	3.0
5	3.2	3.3	3.2
6	1.9	1.8	2.1
7	3.5	3.1	3.3
8	1.2	1.4	1.4
9	2.8	2.7	2.7
10	0	0	0
11	0.1	0.1	0.1
12	2.8	2.7	3.0
13	0.8	1.6	1.0
14	3.9	3.5	3.7
15	0.3	1.9	2.9
16	4.1	3.0	3.4
17	3.6	3.2	2.2
18	3.2	2.3	2.2
19	1.5	0.9	1.4
20	5.0	5.0	5.0

IC351 (PD4785A) [V]

Pin No.	MODE			Pin No.	MODE		
	STOP	PLAY	REC		STOP	PLAY	REC
1	-22.6	-22.0	-22.0	41	4.8	4.8	4.8
2	0	0	0	42	4.8	4.8	4.8
3	0	0	0	43	0	5.0	5.0
4	0	0	-22.0	44	0.1	4.9	0.1
5	-22.6	0	-22.0	45	5.0	0	0.1
6	0	-22.0	-22.0	46	0.08	0	0.1
7	-22.6	-22.0	-22.0	47	0.08	0	0.1
8	5.0	5.0	5.0	48	0.07	0	0.1
9	0.06	5.0	5.0	49	0.07	0	0.1
10	0.06	0	0 or 5	50	4.9	4.9	0
11	0	0	0	51	4.9	4.9	0
12	5.0	5.0		52	5.0	5.0	5.0
13	5.0	5.0	0	53	4.7	4.7	4.7
14	5.0	0	0	54	4.7	4.7	4.7
15	4.5	0	0	55	4.7	4.7	4.7
16	0.8	0	0	56	-23.6	-23.2	-23.2
17	5.0	0	0	57	-23.6	-23.3	-23.1
18	5.0	5.0	0	58	0	0	0
19	0.08	0	0	59	0	0	0
20	0.08	0	0	60	0	0	0
21	0.08	0	0	61	0	0	0
22	0.05	0	0	62	0	0	0
23	5.0	5.0		63	4.6	4.6	4.6
24	0	0	0	64	0	5.0	5.0
25	5.0	5.0	5.0	65	-24.6	-24.3	-16.0
26	0.06	5.0	–	66	-13.8	-13.6	-10.9
27	5.0	5.0		67	-21.8	-13.4	-13.3
28	0	0	0.1	68	-24.5	-24.4	-21.4
29	0.06	0	0.1	69	-24.6	-16.3	-16.2
30	0.06	0	0.1	70	-8.8	-13.3	-13.4
31	0	0	0.1	71	-25.0	-24.6	-24.7
32	0.07	0	0.1	72	-12.1	-11.7	(-12 to 14)
33	0.07	0	0.1	73	-12.0	(-14 to 8)	0
34	0.07	0	0.1	74	-9.6	-9.4	0
35	0.06	0	0.1	75	-9.6	-9.4	0
36	0	0	0.1	76	-12.1	-6.9	-9.3
37	0.06	0	0.1	77	-22.4	-22.1	-22.0
38	0	0	0	78	-22.4	-22.1	-22.0
39	0	0		79	-22.3	-22.0	-22.0
40	0.05	4.9	4.9	80	-22.4	-22.0	-22.0

IC356 (PD4786A) [V]

Pin No.	MODE			Pin No.	MODE		
	STOP	PLAY	REC		STOP	PLAY	REC
1	3.3	3.4	3.3	38	0.1	5.0	5.0
2	1.9	1.8	2.0	39	4.7	4.8	4.8
3	3.4	3.3	3.4	40	4.3	2.0	2.6
4	1.2	1.6	1.3	41	4.8	4.7	4.7
5	0	0	0.3	42	4.9	4.9	4.8
6	0	0	0.2	43	0	0	0
7	0	0	0.2	44	4.3	4.3	4.2
8	0	0	1.0	45	0	5.0	5.0
9	0	0	0.2	46	0	4.9	0
10	0	0	0.2	47	0	4.9	4.9
11	0	0	1.4	48	2.5	2.6	2.3
12	0	0	0.2	49	0.1	0.1	0.1
13	0.6	0.8	0.9	50	0.1	0.1	4.9
14	0.2	0.3	0.3	51	2.6	–	–
15	5.0	5.0	5.0	52	2.6	–	–
16	0	0	0	53	0	0	0
17	4.9	4.9	4.9	54	0	0	0
18	0	0	0	55	5.0	5.0	5.0
19	0	0	0	56	0.1	4.8	4.8
20	0	0	0	57	0	0	0
21	0	0	0	58	5.0	4.9	4.9
22	0	0.1	0	59			
23	1.7	2.6	2.0	60	0.1	5.0	5.0
24	1.6	0.8	1.2	61			
25	4.8	4.8	4.8	62			
26	5.0	5.0	5.0	63	0.1	5.0	4.9
27	5.0	5.0	5.0	64	0.1	0	4.9
28	5.0	5.0	5.0	65	0.1	5.0	5.0
29	4.9	5.0	4.9	66	0.1	0	0
30	0.4	2.8	2.8	67	4.9	4.9	4.9
31	0.4	0	0	68	4.9	4.9	4.9
32	0.3	0	0	69	4.9	4.9	4.9
33	0	0	0	70	4.9	4.9	4.9
34	5.0	0	5.0	71	0.1	0.1	0.1
35	0	5.0	5.0	72	3.5	3.3	3.1
36	0.8	0	2.8	73	0.1	3.2	3.3
37	0.2	0	0	74	0.1	3.2	3.0

IC357 (TC74HC367AF) [V]

Pin No.	MODE		
	STOP	PLAY	REC
1	4.4	4.3	4.3
2	0	0	0
3	0	0	0
4	4.5	4.4	4.4
5	4.5	2.3	2.3
6	5.4	5.0	5.0
7	4.7	2.5	2.5
8	0	0	0
9	4.8	4.8	4.7
10	4.8	4.8	4.8
11	0	0	0
12	0	0	0
13	4.8	4.7	4.7
14	4.5	4.4	4.5
15	4.5	4.4	4.5
16	5.0	5.0	5.0

IC358 (TC74HC367AF) [V]

Pin No.	MODE		
	STOP	PLAY	REC
1	0.6	0.6	0.6
2	4.9	4.9	4.8
3	4.9	4.9	–
4	4.9	4.9	4.8
5	4.8	4.8	4.7
6	4.3	1.8 to 2.3	2.2 to 2.7
7	4.7	2.5	2.5
8	0	0	0
9	4.4	2.2	2.2
10	4.4	2.2	2.3
11	4.8	4.7	4.7
12	0	4.6	4.6
13	5.0	4.9	4.9
14	4.9	4.8	4.8
15	5.0	4.8	4.8
16	5.0	5.0	5.0

IC359 (TC7S04F) [V]

Pin No.	MODE		
	STOP	PLAY	REC
1	0	0	0.1
2	0.2	0.3	0.3
3	0	0	0
4	4.7	4.7	4.7
5	5.0	5.0	5.0

IC354 (TC7S00F) [V]

Pin No.	MODE		
	STOP	PLAY	REC
1	0	0	0
2	4.9	4.9	4.9
3	0	0	0
4	4.5	4.5	4.5
5	4.5	4.5	4.5

IC355 (TC7S04F) [V]

Pin No.	MODE		
	STOP	PLAY	REC
1	0	0	0
2	4.9	5.0	5.0
3	0	0	0
4	0	0	0
5	5.0	5.0	5.0

IC360 (XL93LC46AF) [V]

Pin No.	MODE		
	STOP	PLAY	REC
1	0	0	0
2	5.0	5.0	5.0
3	0	0	0
4	4.9	4.8	4.8
5	4.3	2.2	2.2
6	4.8	4.7	4.7
7	0	0	0
8	0	0	0

IC361 (PST572E) [V]

Pin No.	MODE		
	STOP	PLAY	REC
1	5.0	5.0	5.0
2	0	0	0
3	4.9	5.0	5.0

IC362 (TC7S04F) [V]

Pin No.	MODE		
	STOP	PLAY	REC
1	0.2	0	0.1
2	5.0	0	5.0
3	0	0	0
4	0	5.0	0
5	5.0	5.0	5.0

IC363 (TC7S14F) [V]

Pin No.	MODE		
	STOP	PLAY	REC
1	0.2	0	0.1
2	0	5.0	0
3	0	0	0
4	5.0	0	5.0
5	5.0	5.0	5.0

IC5008 (BA4560F) [V]

Pin No.	MODE		
	STOP	PLAY	REC
1	0	-0.2	-0.5
2	0	0	0
3	0	0	0
4	-5.0	-5.0	-5.0
5	0	0	0
6	0	0	0
7	0	0.1	-0.3
8	5.0	5.0	5.0

IC5024 (HD74HC4053FP) [V]

Pin No.	MODE		
	STOP	PLAY	REC
1	0	0.3	-0.5
2	0	0	0
3	0	0	0
4	0	0	0
5	0	0	0
6	0	0	0
7	-4.9	-4.9	-5.0
8	0	0	0
9	0	4.9	5.0
10	0	0	0
11	0	0	0
12	0	0	0
13	0	-0.7 to -0.2	-1.0 to -0.5
14	0	0	0
15	0	0	0
16	5.0	5.0	5.0

Q13 (DTC114TK) [V]

Pin No.	MODE		
	STOP	PLAY	REC
E	0	0	0
C	0	0	0
B	5.0	5.0	5.0

Q14 (DTA124EK) [V]

Pin No.	MODE		
	STOP	PLAY	REC
E	5.0	5.0	5.0
C	5.0	5.0	5.0
B	0	0	0

Q201 (DTA124ES) [V]

Pin No.	MODE		
	STOP	PLAY	REC
E	5.0	5.0	5.0
C	0	0	3.4
B	5.0	5.0	2.8

Q202 (2SC2412K) [V]

Pin No.	MODE		
	STOP	PLAY	REC
E	-3.8	0	3.9
C	-4.9	5.0	5.0
B	-4.7	4.6	4.6

Q203 (2SA1037K) [V]

Pin No.	MODE		
	STOP	PLAY	REC
E	3.9	-3.9	-3.9
C	5.0	-4.9	-4.9
B	4.6	-4.7	-4.7

Q208 (DTC114TS) [V]

Pin No.	MODE		
	STOP	PLAY	REC
E	0	0	0
C	0.6	0.6	0.6
B	4.4	4.3	4.3

Q5026 (DTC124ES) [V]

Pin No.	MODE		
	STOP	PLAY	REC
E	5.0	5.0	5.0
C	5.0	3.6	3.6
B	0	5.0	5.0

D AUDIO DIGITAL BOARD ASSY

• Waveforms and voltages of AUDIO DIGITAL BOARD ASSY

• Measuring condition : DC input unless otherwise noted.

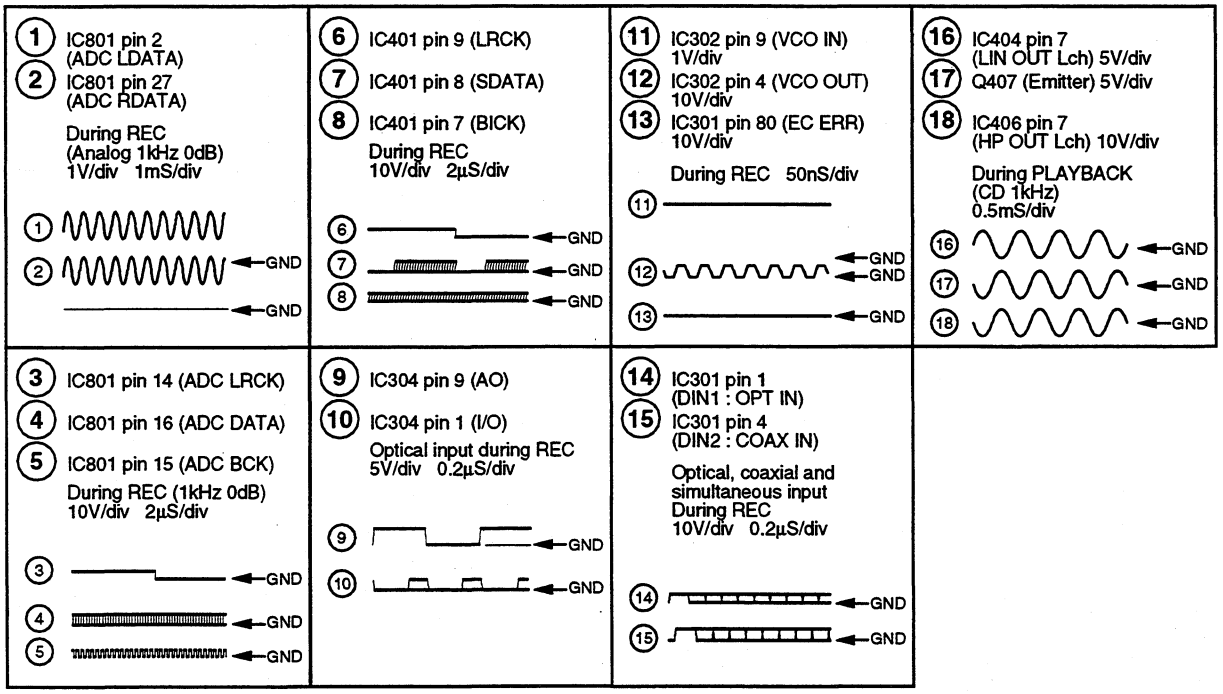

IC301 (LC89585) [V]

Pin No.	MODE			Pin No.	MODE		
	STOP	PLAY	REC		STOP	PLAY	REC
1	0	0	0	51	0	0	0
2	0	0	0	52	5.0	5.0	3.9
3	0	0	0	53	5.0	5.0	4.1
4	0	0	0	54	0	0	2.3
5	2.4	2.4	2.4	55	0	0	2.3
6	2.4	2.4	2.4	56	0	0	2.4
7	5.0	5.0	5.0	57	0	0	2.5
8	1.8	1.8	1.8	58	0	0	2.5
9	0	0	0	59	0	0	2.5
10	2.5	2.5	2.5	60	0	0	2.4
11	2.5	2.5	2.5	61	5.0	5.0	5.0
12	0	0	0	62	0	0	0
13	5.0	5.0	5.0	63	0	0	1.4
14	2.0	2.3	2.4	64	0	0	1.3
15	0	0	0	65	0	0	2.4
16	0	0	0	66	5.0	5.0	2.0
17	0	0	0	67	5.0	5.0	4.1
18	0	5.0	5.0	68	0	0	0.9
19	0	5.0	5.0	69	0	0	0.8
20	5.0	5.0	5.0	70	0	0	0
21	0	0	0	71	0	0	0.7
22	0	0	0	72	0	0	0
23	0	0	0	73	0	0	0
24	0	0	0	74	0	0	0
25	0	0	0.1	75	5.0	5.0	5.0
26	2.4	2.4	5.0	76	2.6	0	2.5
27	2.4	2.4	0 to 3.4	77	2.7	5.0	2.7
28	2.4	2.4	0 to 2.4	78	2.4	0	2.4
29	5.0	5.0	5.0	79	2.4	0	2.4
30	0	1.6	0	80	0	5.0	0
31	2.0	2.0	2.2	81	0	0	0
32	2.5	0	2.5	82	0	0	0
33	0	0	0.6	83	5.0	0	5.0
34	0	0.6	0.6	84	0	0	4.9
35	2.0	2.0	2.0	85	0	0	3.1
36	0	2.5	2.5	86	0	0	0.6
37	0	5.0	0	87	0	0	0.7
38	2.2	2.2	2.2	88	0	0	1.9
39	2.7	2.7	2.6	89	5.0	5.0	5.0
40	0	0	0	90	0	0	0
41	5.0	5.0	5.0	91	1.4	5.0	1.3
42	2.0	2.0	2.2	92	5.0	5.0	5.0
43	2.0	2.2	2.2	93	5.0	4.9	4.9
44	0	2.4	0	94	0.2	0	0.3
45	2.0	2.0	2.0	95	0	0	0
46	2.5	2.5	2.5	96	0	0	0
47	2.4	2.4	2.4	97	4.8	4.8	4.8
48	2.0	2.0	2.1	98	4.9	4.8	4.8
49	0	0	0	99	0.6	2.3	2.3
50	4.9	4.9	4.9	100	5.0	5.0	5.0

IC302 (CD74HC4046AM) [V]

Pin No.	MODE
	STOP
1	5.0
2	0
3	0
4	2.5
5	0
6	0.7
7	0.7
8	0
9	2.5
10	0
11	2.5
12	4.4
13	0
14	0
15	5.0
16	5.0

IC304 (MB81C4256A-70PJ)[V]

Pin No.	MODE		
	STOP	PLAY	REC
1	0	0	1.4
2	0	0	1.4
3	5.0	5.0	4.1
4	5.0	5.0	2.0
5	0	0	2.5
6	–	–	–
7	–	–	–
8	–	–	–
9	0	0	1.3
10	0	0	1.4
11	0	0	2.5
12	0	0	2.5
13	5.0	5.0	5.0
14	0	0	2.5
15	0	0	2.5
16	0	0	2.5
17	0	0	2.5
18	0	0	2.5
19	–	–	–
20	–	–	–
21	–	–	–
22	5.0	5.0	4.1
23	5.0	5.0	3.9
24	0	0	0.9
25	0	0	0.8
26	0	0	0

IC803 (NJM4580D) [V]

Pin No.	MODE		
	STOP	PLAY	REC
1	0	0	0
2	0	0	0
3	0	0	0
4	-9	-9	-9
5	0	0	0
6	0	0	0
7	0	0	0
8	9	9	9

IC804 (NJM4580D) [V]

Pin No.	MODE		
	STOP	PLAY	REC
1	0	0	0
2	0	0	0
3	0	0	0
4	-9	-9	-9
5	0	0	0
6	0	0	0
7	0	0	0
8	9	9	9

IC404 (NJM4580D) [V]

Pin No.	MODE		
	STOP	PLAY	REC
1	0	0	0
2	1.2	1.2	1.2
3	1.2	1.2	1.2
4	-9	-9	-9
5	0	0	0
6	0	0	0
7	0	0	0
8	9	9	9

IC406 (M5218AFP) [V]

Pin No.	MODE		
	STOP	PLAY	REC
1	0	0	0
2	0	0	0
3	0	0	0
4	-9	-9	-9
5	0	0	0
6	0	0	0
7	0	0	0
8	9	9	9

IC801 (AK5340-VS)[V]

Pin No.	MODE		
	STOP	PLAY	REC
1	2.5	2.5	2.5
2	2.5	2.5	2.5
3	5.0	5.0	2.4
4	5.0	5.0	0
5	0	0	0
6	0	0	0
7	0	0	0
8	0	0	0
9	0	0	0
10	5.0	5.0	0
11	0	0	0
12	5.0	5.0	5.0
13	0	0	0
14	2.5	2.5	2.5
15	2.0	2.0	2.2
16	0	0	2.5
17	5.0	5.0	5.0
18	5.0	5.0	5.0
19	0	0	0
20	2.1	2.1	2.1
21	0	0	0
22	0	0	0
23	0	0	0
24	5.0	5.0	5.0
25	0	0	0
26	5.0	5.0	2.4
27	2.5	2.5	2.5
28	2.5	2.5	2.5

Q301 (DTA114TS) [V]

Pin No.	MODE		
	STOP	PLAY	REC
E	5.0	5.0	5.0
C	0.5	0.4	0.4
B	5.0	5.0	5.0

Q303 (DTA114TS) [V]

Pin No.	MODE		
	STOP	PLAY	REC
E	5.0	5.0	5.0
C	0.9	0.8	0.8
B	5.0	5.0	5.0

Q304 (DTC114ES) [V]

Pin No.	MODE		
	STOP	PLAY	REC
E	0	0	0
C	2.0	–	–
B	0.2	-0.1 to 0	0

Q401 (DTC124ES) [V]

Pin No.	MODE		
	STOP	PLAY	REC
E	-9	-9	-9
C	1.4	-9	-9
B	-9	2.0	2.0

Q402 (DTA114ES) [V]

Pin No.	MODE		
	STOP	PLAY	REC
E	5.0	5.0	5.0
C	-9	5.0	5.0
B	5.0	3.6	3.6

Q403 (DTA124ES) [V]

Pin No.	MODE		
	STOP	PLAY	REC
E	5.0	5.0	5.0
C	-9	5.0	5.0
B	5.0	0.2	0.2

Q404 (DTC124ES) [V]

Pin No.	MODE		
	STOP	PLAY	REC
E	5.0	5.0	5.0
C	-9	5.0	5.0
B	5.0	0.2	0.2

Q405 (2SD2114K) [V]

Pin No.	MODE		
	STOP	PLAY	REC
E	-9	-9	-9
C	1.1	-9	-9
B	-9	3.7	3.7

Q406 (2SD2114K) [V]

Pin No.	MODE		
	STOP	PLAY	REC
E	-9	-9	-9
C	1.1	-9	-9
B	-9	3.7	3.7

Q408 (2SD2114K) [V]

Pin No.	MODE		
	STOP	PLAY	REC
E	0	0	0
C	0	0	0
B	0.6	-0.7	-0.1

4. PCB CONNECTION DIAGRAM

NOTE FOR PCB DIAGRAMS :

1. Part numbers in PCB diagrams match those in the schematic diagrams.
2. A comparison between the main parts of PCB and schematic diagrams is shown below.

Symbol In PCB Diagrams	Symbol In Schematic Diagrams	Part Name
B C E	B C E B C E	Transistor
B C E	B C E B C E	Transistor with resistor
D G S	D G S D G S	Field effect transistor
		Resistor array
		3-terminal regulator

3. The parts mounted on this PCB include all necessary parts for several destinations.
   For further information for respective destinations, be sure to check with the schematic diagram.
4. View point of PCB diagrams.

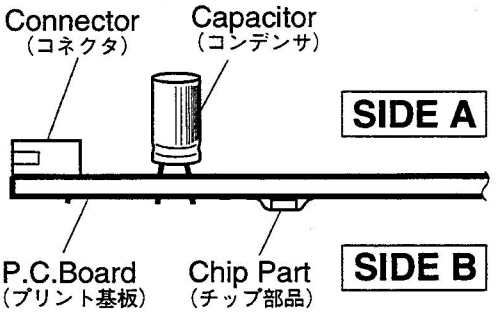

4.1 MECHANISM AND HEAD BOARD ASSEMBLIES

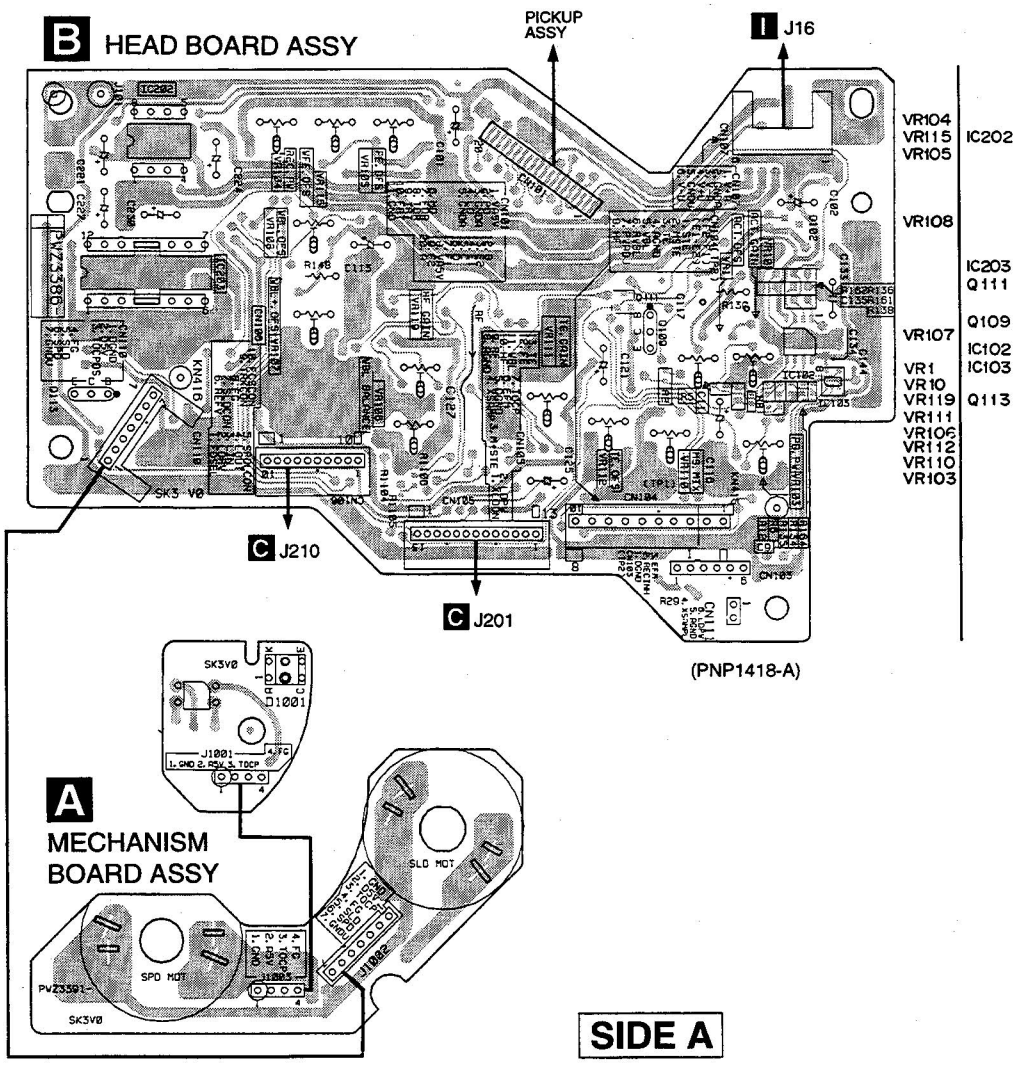

B HEAD BOARD ASSY

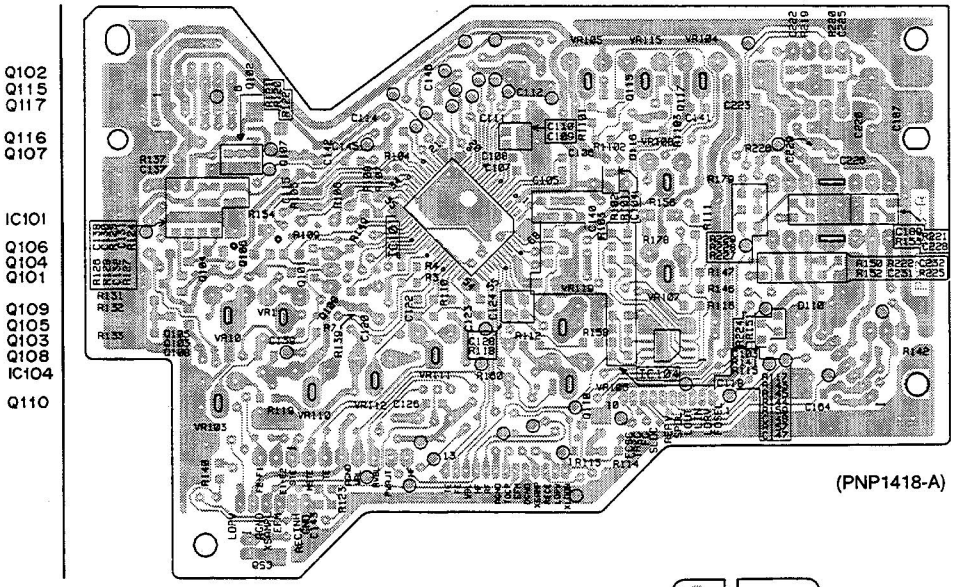

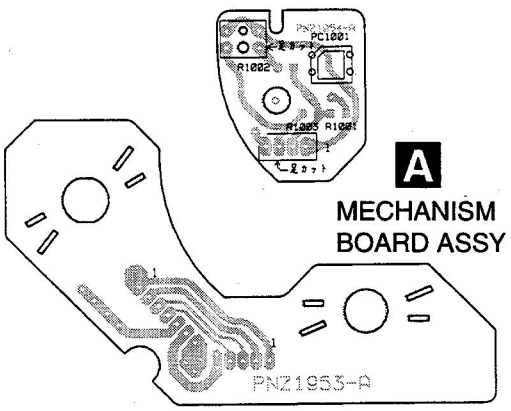

A MECHANISM BOARD ASSY

SIDE B

4.2 SERVO UCOM BOARD ASSY

C SERVO UCOM BOARD ASSY

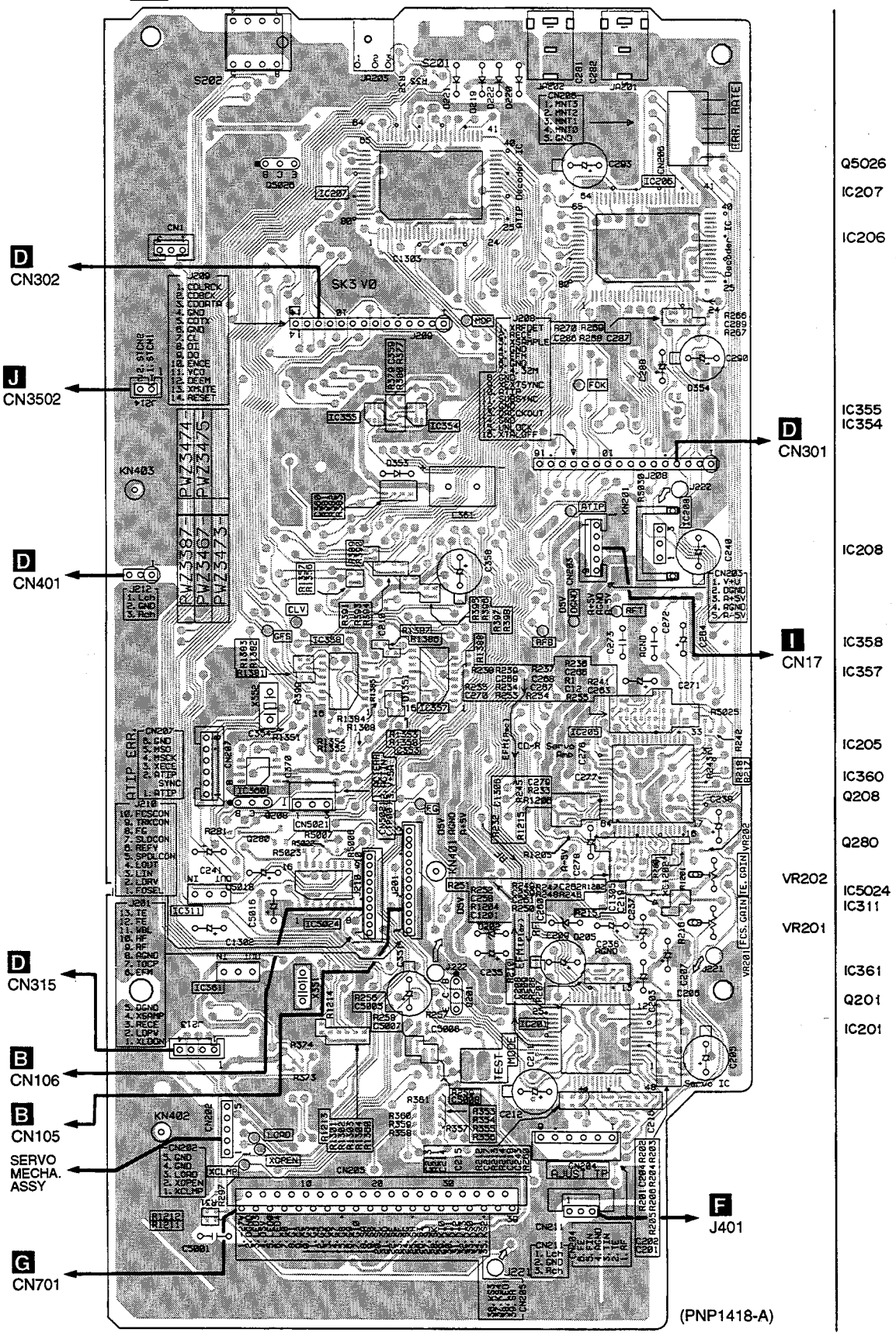

SIDE A

C SERVO UCOM BOARD ASSY

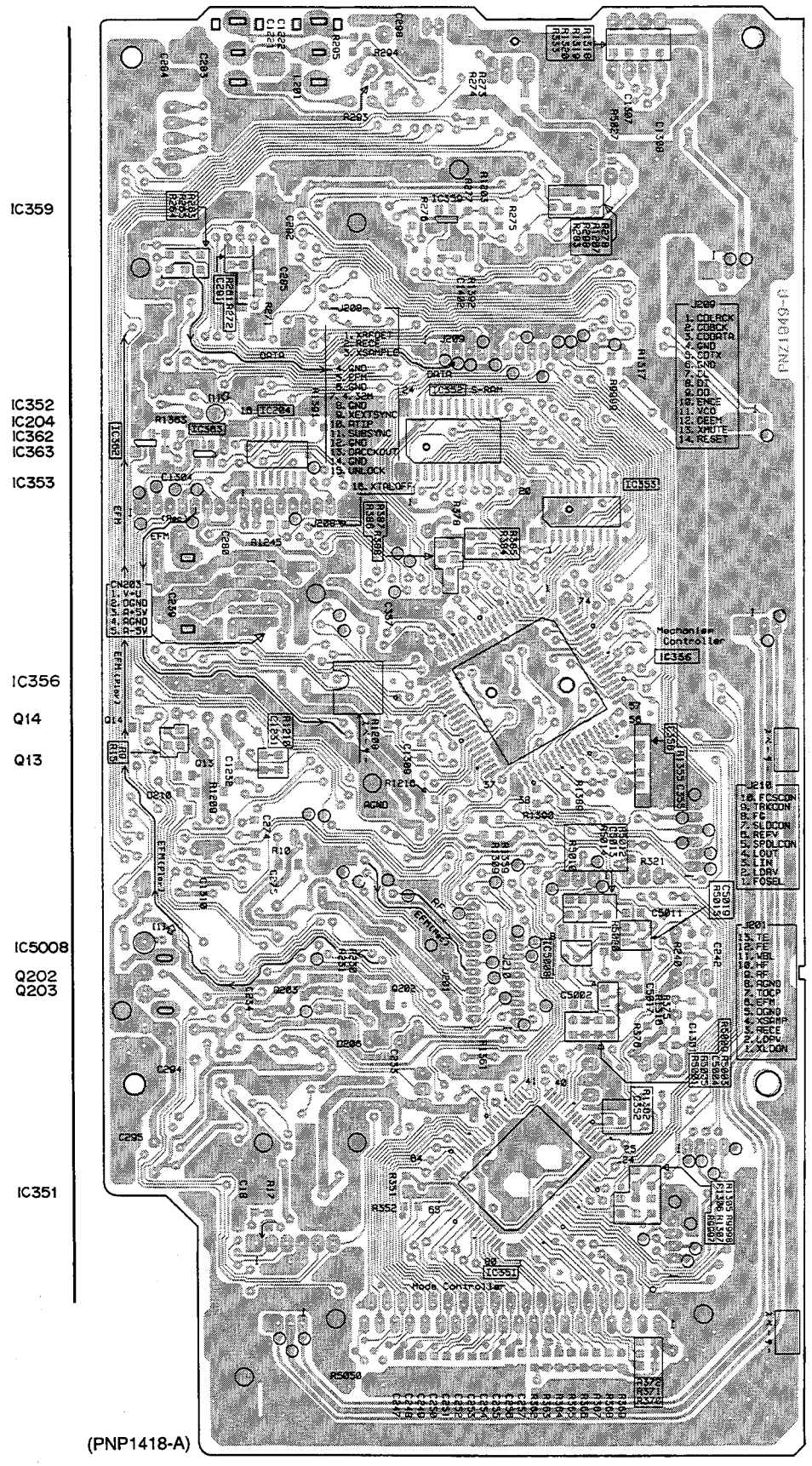

4.3 AUDIO DIGITAL AND STRATEGY SMALL BOARD ASSEMBLIES

D AUDIO DIGITAL BOARD ASSY

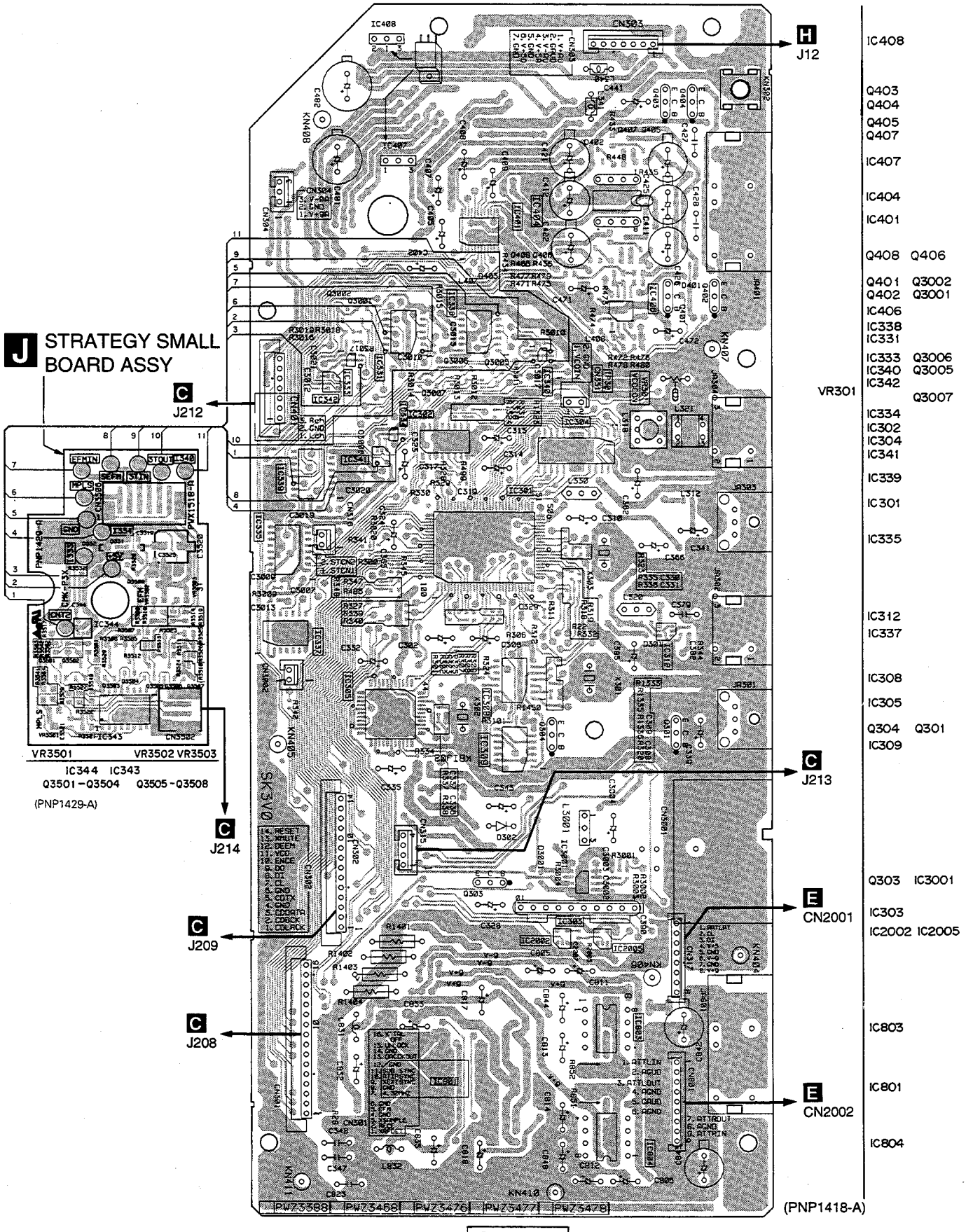

D AUDIO DIGITAL BOARD ASSY

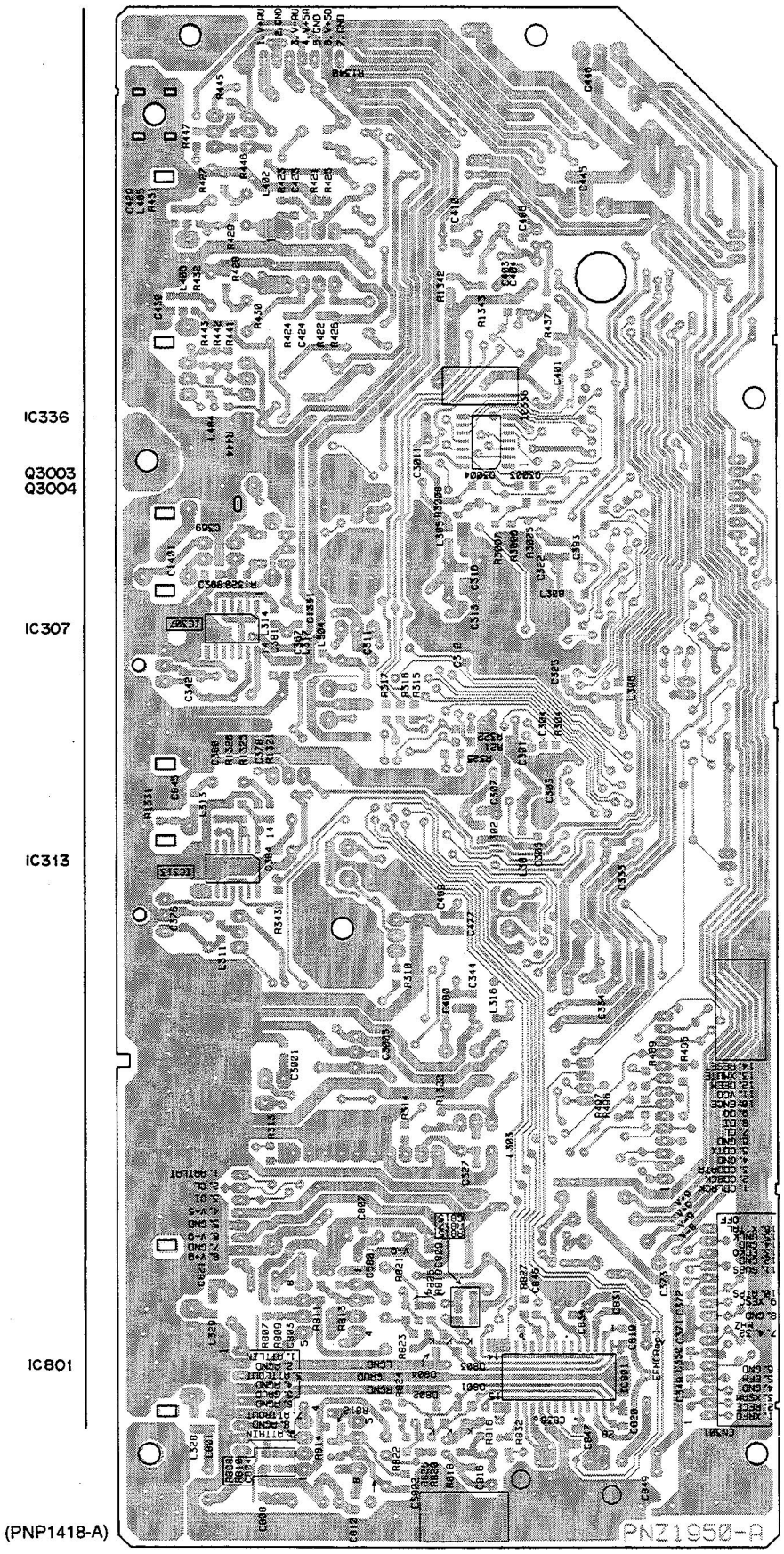

SIDE B

4.4 FUNCTION, POWER A AND POWER B BOARD ASSEMBLIES

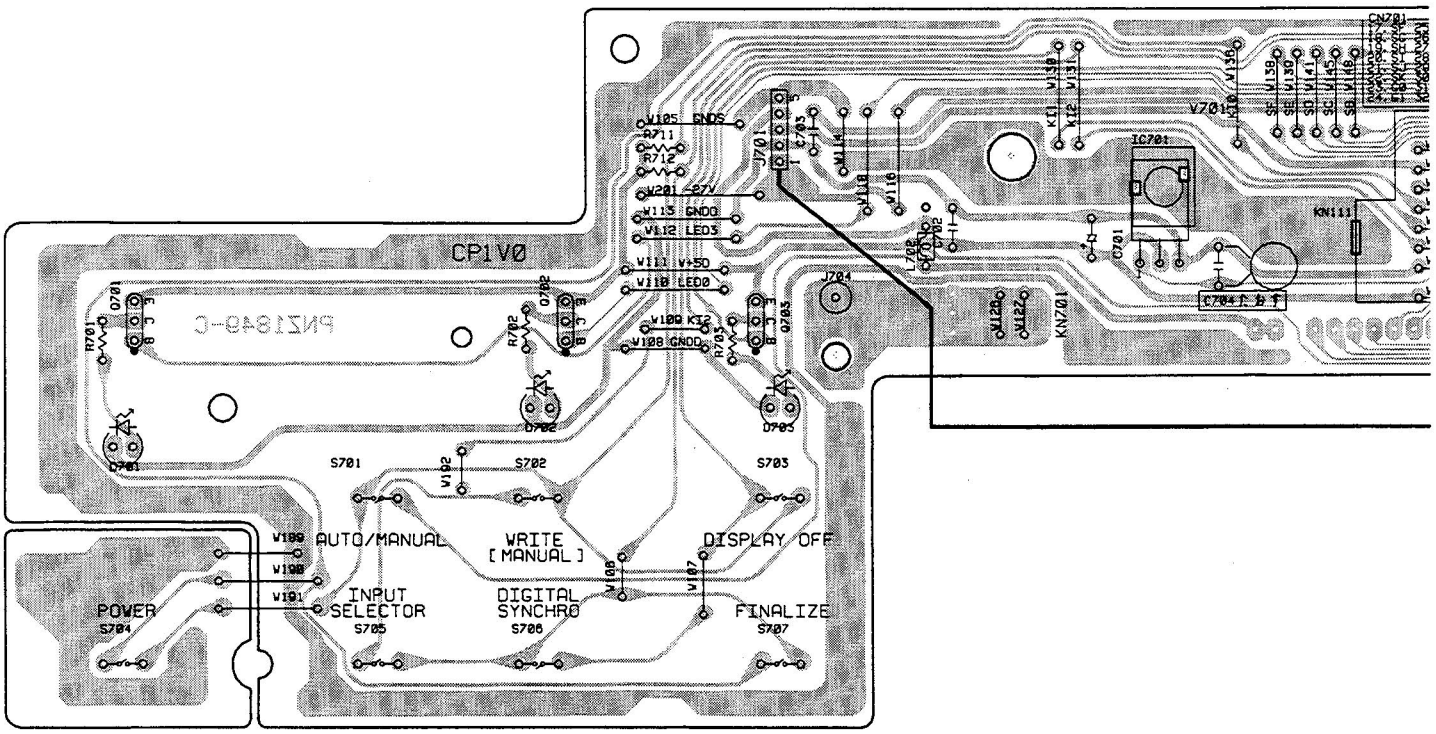

H POWER A BOARD ASSY

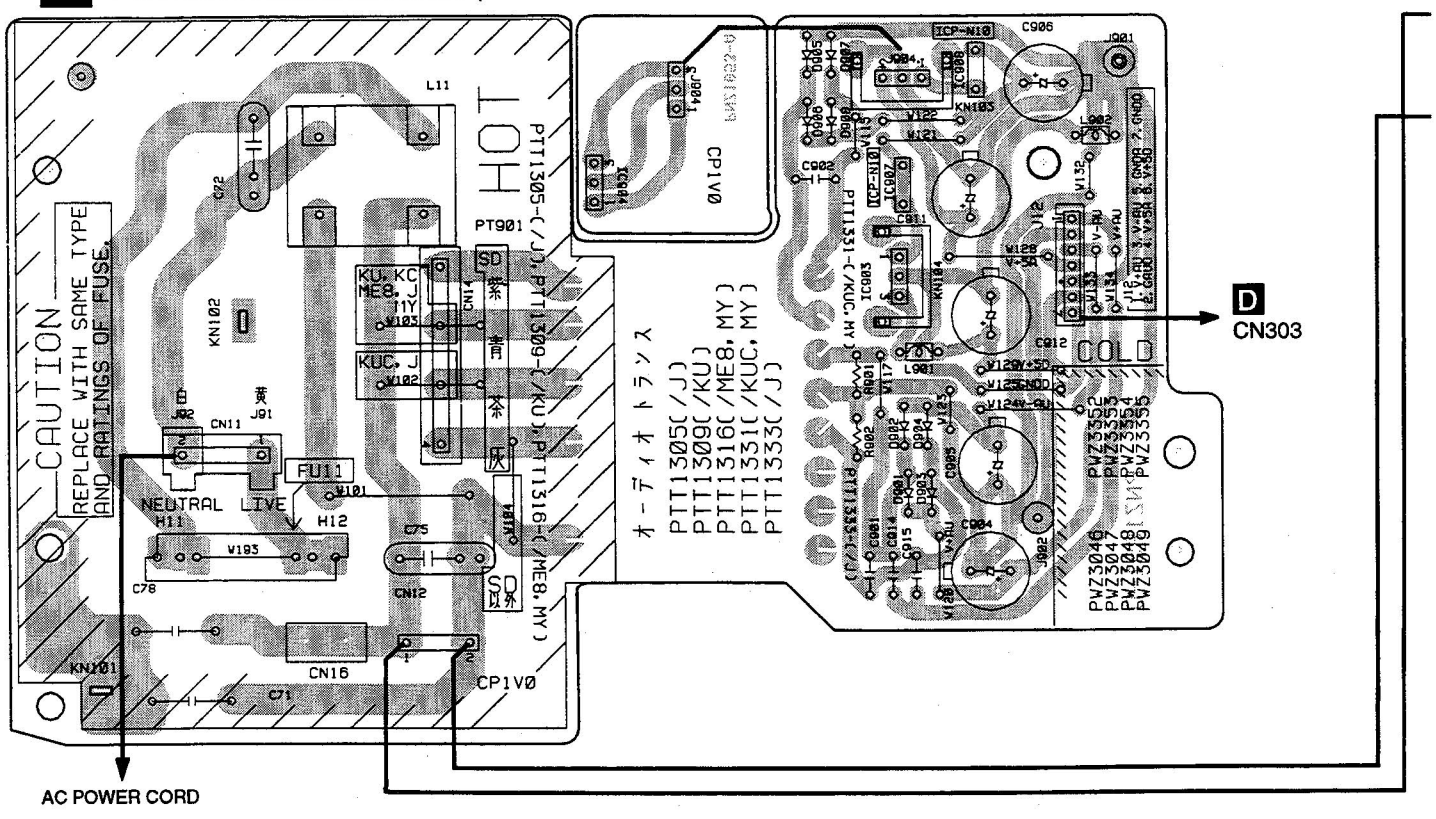

(PNP1393-D)

SIDE A

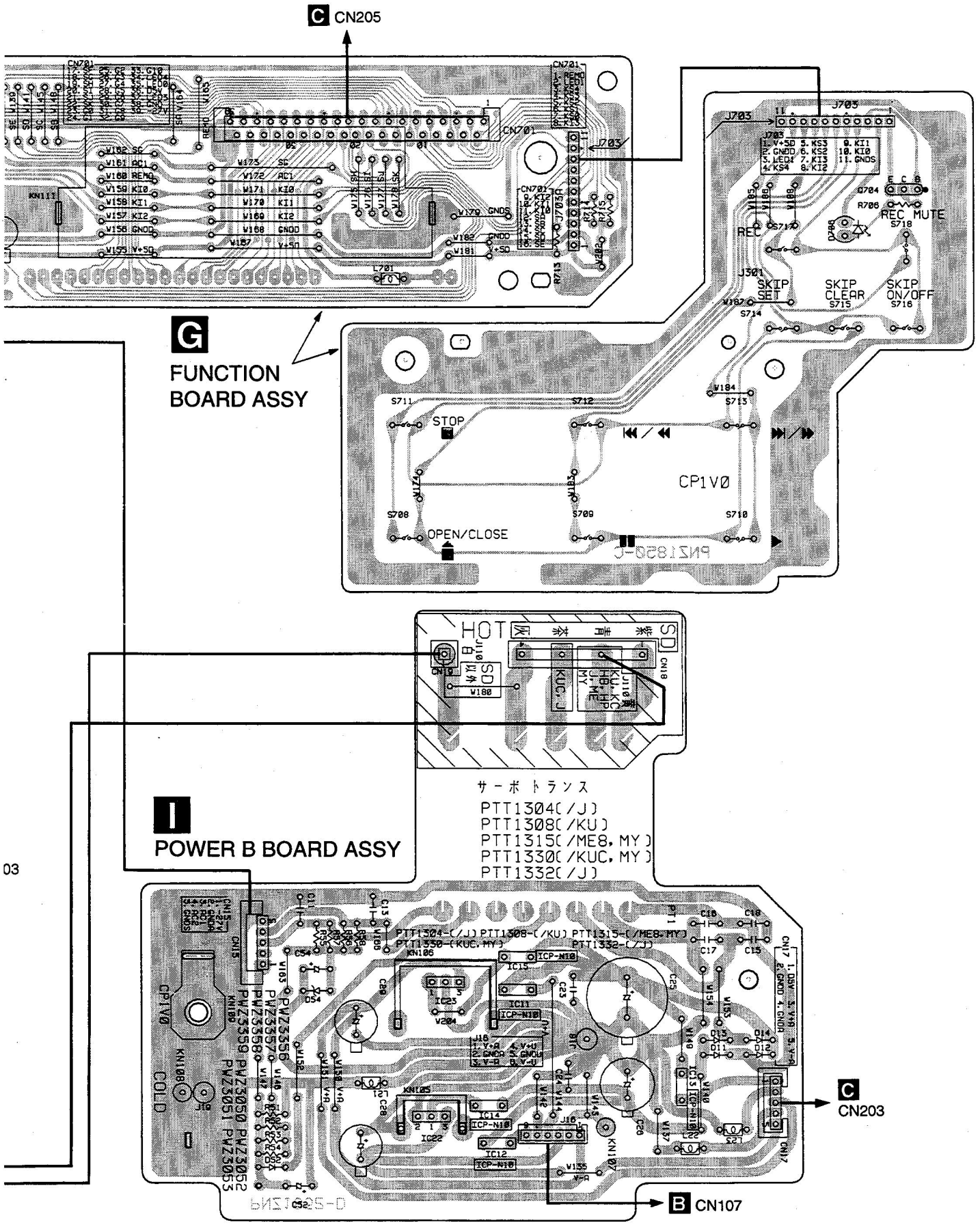
C CN205
G
FUNCTION
BOARD ASSY
J703
REC
REC MUTE
SKIP
SET
SKIP
CLEAR
SKIP
ON/OFF
STOP
CP1VØ
OPEN/CLOSE
I
POWER B BOARD ASSY
サーボトランス
PTT1304(/J)
PTT1308(/KU)
PTT1315(/ME8, MY)
PTT1330(/KUC, MY)
PTT1332(/J)
C
CN203
B CN107

4.5 ALC AND HEADPHONE BOARD ASSEMBLIES

E ALC BOARD ASSY

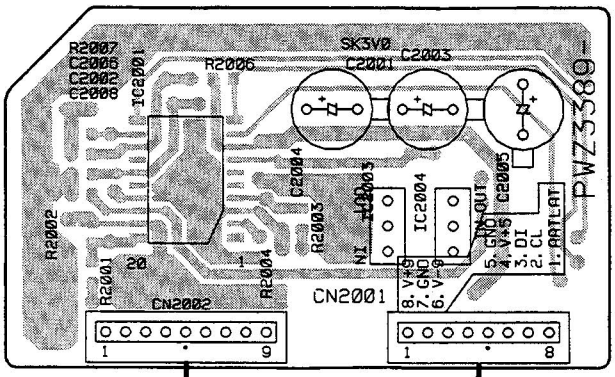

D CN801 **D** CN317

F HEADPHONE BOARD ASSY

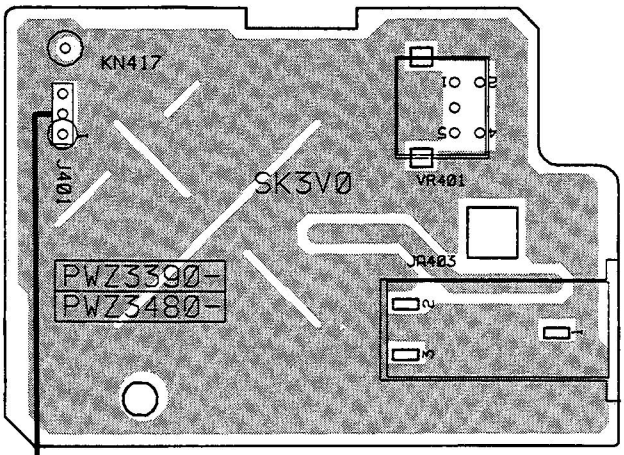

C CN211

SIDE A

E ALC BOARD ASSY

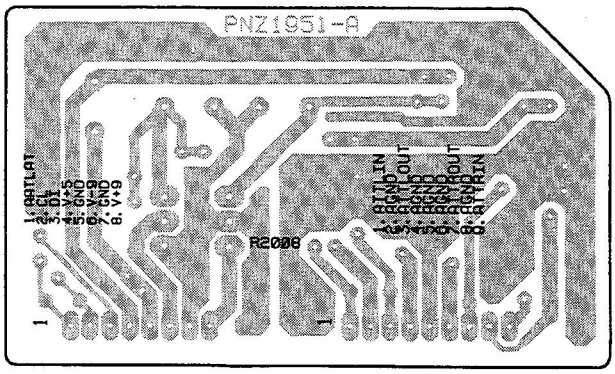

F HEADPHONE BOARD ASSY

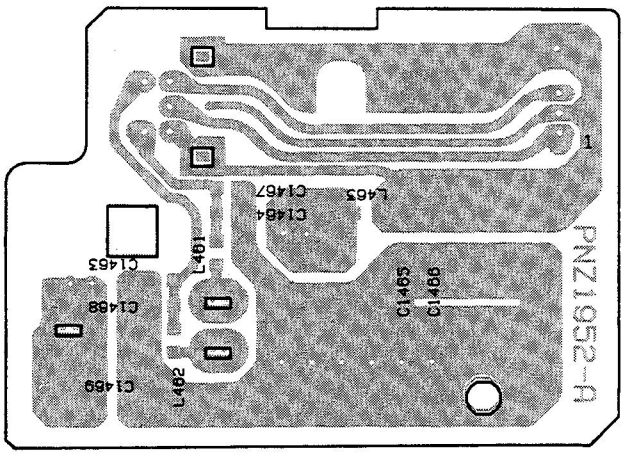

(PNP1418-A)

SIDE B

5. PCB PARTS LIST

NOTES: • *Parts marked by "NSP" are generally unavailable because they are not in our Master Spare Parts List.*

• *The ⚠ mark found on some component parts indicates the importance of the safety factor of the part. Therefore, when replacing, be sure to use parts of identical designation.*

• *When ordering resistors, first convert resistance values into code form as shown in the following examples.*

Ex.1 When there are 2 effective digits (any digit apart from 0), such as 560 ohm and 47k ohm (tolerance is shown by J=5%, and K=10%).

560Ω → 56 × 10¹ → 561 ..... RD1/4PU 561 J
47kΩ → 47 × 10³ → 473 ..... RD1/4PU 473 J
0.5Ω → R50 ..... RN2H R50 K
1Ω → 1R0 ..... RS1P 1R0 K

Ex.2 When there are 3 effective digits (such as in high precision metal film resistors).

5.62kΩ → 562 × 10¹ → 5621 ..... RN1/4PC 5621 F

Mark	No.	Description	Part No.
		LIST OF ASSEMBLIES	
NSP		MOTHER BOARD ASSY	PYY1209
		HEAD BOARD ASSY	PYY1211
NSP		├ HEAD BOARD ASSY	PWZ3386
NSP		├ ALC BOARD ASSY	PWZ3389
NSP		├ HEADPHONE BOARD ASSY	PWZ3390
NSP		└ MECHANISM BOARD ASSY	PWZ3391
		├ AUDIO DIGITAL BOARD ASSY	PYY1212
NSP		└ AUDIO DIGITAL BOARD ASSY	PWZ3388
		└ SERVO UCOM BOARD ASSY	PYY1214
NSP		└ SERVO UCOM BOARD ASSY	PWZ3387
NSP		STRATEGY SMALL BOARD ASSY	PWX1518
NSP		SUB BOARD ASSY	PWX1505
		├ FUNCTION BOARD ASSY	PWZ3042
		├ POWER A BOARD ASSY	PWZ3354
		└ POWER B BOARD ASSY	PWZ3359
		MOTHER BOARD ASSY	
		OTHERS	
		PC BOARD	PNP1418
		A MECHANISM BOARD ASSY	
		SEMICONDUCTORS	
	D1001		GP1S24
	PC1001		NJL5803K-F1
		RESISTORS	
	All Resistors		RS1/10S□□□J
		OTHERS	
	J1002	CONNECTOR ASSY 7P	PDE1260
		B HEAD BOARD ASSY	
		SEMICONDUCTORS	
	IC102, IC104		BA4560F
⚠	IC202		LA6517
⚠	IC203		LA6520
	IC101		PA4022A
	IC103		TC7S08F

Mark	No.	Description	Part No.
	Q103–Q106		2SA1037K
	Q107, Q108		2SA1461
	Q102		2SB1189
	Q101		2SC2412K
	Q110		2SJ146
	Q115		DTA114EK
	Q111		DTA114TK
	Q117		DTA124EK
	Q116		DTC114TK
	Q109		DTC114TS
	Q113		DTC144TS
	D101		DA114
	D110		UDZ6.2B
		CAPACITORS	
	C103, C142, C145, C146		CCSQCH100D50
	C123, C124		CCSQCH221J50
	C109–C112		CCSQCH391J50
	C147, C148		CCSQCH471J50
	C122		CCSQCH620J50
	C140		CCSQCK2R0C50
	C105–C108		CCSQSL821J50
	C116		CEJA100M16
	C101, C102, C113, C121, C125		CEJA101M10
	C221, C224, C227, C230		CEJA470M16
	C117		CEJANP1R0M50
	C127		CEJANP4R7M16
	C133		CFTXA103J50
	C114, C130, C131, C137, C138		CKSQYB103K50
	C141		CKSQYB103K50
	C128		CKSQYB182K50
	C11		CKSQYB683K25
	C104, C118, C120, C126		CKSQYF103Z50
	C134, C135, C139, C164, C189		CKSQYF103Z50
	C220, C222, C223, C225, C226		CKSQYF103Z50
	C228, C229, C232		CKSQYF103Z50
	C115, C132, C187		CKSQYF104Z25
	C9		CKSRYB392K50
	C144		CKSRYF103Z50
		RESISTORS	
	R130 (62Ω)		PCN1037
	R148 (2.2kΩ)		PCN1038
	R1104 (2.2kΩ)		PCN1039
	R138, R162		RN1/10SE1202D
	R136, R161		RN1/10SE3002D

PDR-04

Mark	No.	Description	Part No.
	R2		RS1/16S104J
	R135		RS1/16S132J
	R6		RS1/16S133J
	R1106		RS1/16S202J
	R1105		RS1/16S222J
	R134		RS1/16S362J
	R12		RS1/16S471J
	R8		RS1/16S472J
	VR10 (2.2kΩ)		RCP1019
	VR1, VR103-VR105, VR107 (10kΩ)		RCP1045
	VR108, VR112, VR115 (10kΩ)		RCP1045
	VR106, VR111 (22kΩ)		RCP1046
	VR110, VR119 (47kΩ)		RCP1047
	Other Resistors		RS1/10S□□□J

OTHERS

	CN106 ZH CONNECTOR 10P	S10B-ZR
	CN105 ZH CONNECTOR 13P	S13B-ZR
	CN107 KR CONNECTOR	S6B-PH-K-S
	PCB BINDER	VEF1008

C SERVO UCOM BOARD ASSY

SEMICONDUCTORS

	IC5008	BA4560F
	IC201	CXA1372Q
	IC206	CXD2500BQ
	IC204, IC5024	HD74HC4053FP
	IC353	HD74HC573FP
	IC352	LH5116NA-10
⚠	IC208	LM2940CT-5.0
	IC205	PA9004A
	IC351	PD4785A
	IC356	PD4786A
	IC207	PDJ006A
	IC311	PST529C
	IC361	PST572E
	IC357, IC358	TC74HC367AF
	IC354	TC7S00F
	IC355, IC359, IC362	TC7S04F
	IC363	TC7S14F
	IC360	PYY1196
	Q203	2SA1037K
	Q202	2SC2412K
	Q14	DTA124EK
	Q201	DTA124ES
	Q13, Q280	DTC114TK
	Q208	DTC114TS
	Q5026	DTC124ES
	D353	1SS133X
	D354	DA114
	D206	DA204K
	D1351	DAN202K
	D210	DAP202K
	D202, D205	MTZJ3.9BX

CAPACITORS

	C291	CCSQCH100D50
	C1308, C284, C295	CCSQCH101J50
	C247-C257	CCSQCH121J50
	C355, C356	CCSQCH150J50
	C282	CCSRCH101J50
	C12	CCSRCH270J50
	C241	CEAS100M50
	C209, C212, C290	CEAS101M6R3
	C278	CEAS1R0M50
	C1302, C264, C271	CEAS2R2M50
	C205, C235-C238, C293, C5016	CEAS470M10
	C5018	CEAS470M10
	C240	CEAS471M10
	C351, C358	CEAS471M6R3
	C203, C207	CEAS4R7M50
	C288	CEASR47M50
	C18	CKSQYB102K50
	C1310, C201, C202, C204, C206	CKSQYB104K25
	C274	CKSQYB104K25
	C5004	CKSQYB222K50
	C1309	CKSQYB272K50
	C5013	CKSQYB333K50
	C1304	CKSQYB471K50
	C260	CKSQYB683K25
	C233, C234, C239, C242, C280	CKSQYF103Z50
	C5017, C5019	CKSQYF103Z50
	C1301, C1307, C285, C292, C352	CKSQYF104Z25
	C357	CKSQYF104Z25
	C283	CKSQYF473Z50
	C279	CKSRYB102K50
	C208, C210, C213, C218, C289	CKSRYB103K50
	C287	CKSRYB152K50
	C258	CKSRYB223K25
	C267-C270	CKSRYB331K50
	C219, C262	CKSRYB332K50
	C211, C217	CKSRYB333K16
	C5005-C5008	CKSRYB471K50
	C214, C215	CKSRYB472K50
	C216, C261, C286	CKSRYB473K16
	C259	CKSRYB681K50
	C1202, C353, C354, C360, C370	CKSRYF103Z50
	C1305, C1306, C359	CKSRYF104Z25
	C281	CKSRYF473Z25
	C272, C273	CQMA104J50
	C361 (0.22F, 5.5V)	PCH1131
	C263, C275-C277 (0.33μF, 16V)	PCL1043
	C5002, C5011 (0.15μF, 16V)	PCL1044
	C1201 (0.082μF, 16V)	PCL1045
	C243 (0.1μF, 16V)	PCL1046

RESISTORS

	R1, R1212, R1214, R297, R32	RS1/16S0R0J
	R1381-R1388, R280	RS1/16S101J
	R233, R5007	RS1/16S102J
	R1215, R1308, R213, R214, R216	RS1/16S103J
	R247, R248, R256-R259, R266	RS1/16S103J
	R268, R5006	RS1/16S103J
	R251, R260, R267	RS1/16S104J
	R206, R241	RS1/16S105J
	R253, R254	RS1/16S114J
	R353-R361	RS1/16S124J
	R208, R232	RS1/16S133J
	R281	RS1/16S181J
	R201	RS1/16S184J
	R210	RS1/16S204J
	R5022	RS1/16S221J

Mark	No.	Description	Part No.
	R5023		RS1/16S222J
	R1202,R1204,R234,R236		RS1/16S273J
	R203,R212		RS1/16S274J
	R211,R242		RS1/16S302J
	R270		RS1/16S332J
	R252		RS1/16S333J
	R243		RS1/16S362J
	R1206		RS1/16S393J
	R215,R217		RS1/16S470J
	R1205,R218		RS1/16S472J
	R1351-R1354,R1356-R1358,R1360		RS1/16S473J
	R246,R373,R377,R379-R383		RS1/16S473J
	R389-R391,R393-R399		RS1/16S473J
	R235,R237		RS1/16S512J
	R209		RS1/16S514J
	R238		RS1/16S562J
	R255		RS1/16S563J
	R249		RS1/16S624J
	R269		RS1/16S682J
	R202,R204		RS1/16S683J
	R250		RS1/16S684J
	R205		RS1/16S754J
	R207		RS1/16S823J
	R5025		RS1/16S912J
	VR201,VR202 (10kΩ)		RCP1045
	Other Resistors		RS1/10S□□□J

OTHERS

CN202	MT 5P CONNECTOR	173981-5
CN211	3P JUMPER CONNECTOR	52147-0310
CN5021	3P TOP POST	B3P-SHF-1AA
CN203	KR CONNECTOR 5P	B5B-PH-K-S
CN204	6P TOP POST	B6P-SHF-1AA
CN206	5P SIDE POST	BS5P-SHF-1AA
J222	LEAD WIRE UNIT	DB015NT0
CN205	FFC CONNECTOR 39P	HLEM39S-1
J201	CONNECTOR ASSY 13P	PDE1264
J210	CONNECTOR ASSY 10P	PDE1269
J214	CONNECTOR ASSY 2P	PG02KA-E15
J213	CONNECTOR ASSY 4P	PG04KA-E25
JA203	MINI JACK	PKN1005
X352	CERAMIC RESONATOR(16MHz)	PSS1010
	PCB BINDER	VEF1008
X351	CERAMIC RESONATOR(4.19MHz)	VSS1014

D AUDIO DIGITAL BOARD ASSY

SEMICONDUCTORS

	IC401	AK4321-VF
	IC801	AK5340-VS
	IC302	CD74HC4046AM
	IC301	LC89585
	IC406	M5218AFP
	IC304	MB81C4256A-70PJ
	IC404,IC803,IC804	NJM4580D
⚠	IC407	NJM7809FA
⚠	IC408	NJM79M09FA
	IC303	PCX1021
	IC309,IC336	TC74HC00AF
	IC338	TC74HC04AF
	IC331	TC74HC08AF
	IC335	TC74HC123AF
	IC337	TC74HC164AF
	IC308,IC313	TC74HCU04AF
	IC2002,IC2005	TC7S04F
	IC341,IC342	TC7S32F
	IC333,IC334,IC340	TK16124M
	Q405-Q408	2SD2114K
	Q402	DTA114ES
	Q301,Q303	DTA114TS
	Q403	DTA124ES
	Q304	DTC114ES
	Q401,Q404	DTC124ES
	D302	1SR35-100AVL
	D402,D403	DA114
	D801,D803	DAN202K
	D401,D802,D804	DAP202K

COILS

	L831,L832	LFA1R0K
	L301-L306,L308,L311,L312	PTL1014
	L316,L328,L329,L402	PTL1014
	L404-L408	PTL1014
	L330 EMI FILTER	PTL1020

CAPACITORS

	C383,C429,C430,C445,C446	CCSQCH101J50
	C477,C480,C801,C821	CCSQCH101J50
	C803,C804	CCSQCH121J50
	C308,C331	CCSRCH120J50
	C330	CCSRCH180J50
	C309	CCSRCH270J50
	C2007,C319,C365	CCSRCH470J50
	C3007	CCSRCH820J50
	C339,C341	CEAS100M50
	C817,C818,C833,C835	CEAS100M50
	C385	CEAS101M25
	C302,C306,C310,C314,C324	CEAS101M6R3
	C332,C335,C402	CEAS101M6R3
	C805,C806	CEAS220M50
	C811-C814,C842-C844,C848	CEAS220M50
	C411,C412	CEAS221M25
	C315,C323,C328	CEAS470M10
	C471,C472	CEAS470M16
	C407,C409	CEAS471M6R3
	C441,C832	CEAS4R7M50
	C347	CKCYB101K50
	C348,C823	CKCYF473Z50
	C301	CKSQYB102K50
	C421,C422,C425,C426	CEZA470M50
	C305	CKSQYB103K50
	C312,C390	CKSQYB472K50
	C303,C307,C333,C334	CKSQYB473K25
	C403	CKSQYB473K50
	C819,C820	CKSQYB821K50
	C807-C810,C846	CKSQYF103Z50
	C3011,C304,C311,C313,C316	CKSQYF104Z25
	C322,C325,C327,C342,C344	CKSQYF104Z25
	C376,C406,C410,C815,C816	CKSQYF104Z25
	C831,C834,C836,C847	CKSQYF104Z25
	C401,C404,C469	CKSQYF104Z50
	C318	CKSRYB103K50
	C3006,C3009,C3010,C3012,C3013	CKSRYF104Z25
	C3015,C3017,C3019-C3021	CKSRYF104Z25
	C427,C428	CQMA102Z50
	C317,C329 (1μF/16V)	PCL1047
	C343,C405,C408 (47μF/10V)	RCH1139
	C481,C482 (3300μF/16V)	DCH1057

PDR-04

Mark	No.	Description	Part No.
RESISTORS			
	R421,R422		RN1/10SE1002D
	R423,R424		RN1/10SE1602D
	R342		RS1/16S0R0J
	R1336,R3015,R3020,R3101		RS1/16S101J
	R318,R319,R323,R324,R328		RS1/16S101J
	R341,R486		RS1/16S101J
	R300,R311,R329,R331		RS1/16S102J
	R1450,R2005,R339		RS1/16S103J
	R320		RS1/16S105J
	R305		RS1/16S151J
	R1333		RS1/16S221J
	R3009		RS1/16S222J
	R1335,R499		RS1/16S271J
	R301		RS1/16S333J
	R302		RS1/16S363J
	R347,R348		RS1/16S472J
	R345		RS1/16S473J
	R1324,R303		RS1/16S512J
	R1323		RS1/16S622J
	R312,R330		RS1/16S681J
	R1401-R1404		RS1/2LMF270J
	VR301 (10kΩ)		RCP1045
	Other Resistors		RS1/10S□□□J
OTHERS			
	CN401	3P JUMPER CONNECTOR	52147-0310
	CN317	CONNECTOR 8P	9115B-08
	CN801	CONNECTOR 9P	9115B-09
	CN331	2P TOP POST	B2P-SHF-1AA
	CN315	KE CONNECTOR 4P	B4B-PH-K-S
	JA301	OPTICAL TRANS. MODULE	GP1F32R
	JA303	OPTICAL TRANS. MODULE	GP1F32T
	JA401,JA801	2P JACK	PKB1029
	KN302	SCREW TERMINAL	PNB1558
	X301	CRYSTAL RESONATOR (16.9344MHz)	PSS1008
		PCB BINDER	VEF1008

E ALC BOARD ASSY

Mark	No.	Description	Part No.
SEMICONDUCTORS			
	IC2001		LM1972M
⚠	IC2003		NJM78L05A
⚠	IC2004		NJM79L05A
CAPACITORS			
	C2001,C2003,C2005		CEAS100M50
	C2002,C2004,C2006,C2008		CKSQYF104Z25
RESISTORS			
	All Resistors		RS1/10S□□□J
OTHERS			
	CN2001	CONNECTOR 8P	9115S-08L
	CN2002	CONNECTOR 9P	9115S-09L

F HEADPHONE BOARD ASSY

Mark	No.	Description	Part No.
COILS			
	L461-L463		PTL1014
CAPACITORS			
	C1466-C1468		CCSQCH101J50
	C1463-C1465		CKSQYF103Z50
	C1469		CKSQYF473Z50
RESISTORS			
	VR401	VARIABLE RESISTOR (5kΩ)	PCS1003
OTHERS			
	JA403	HEADPHONE JACK	RKN1002

SUB BOARD ASSY

OTHERS			
	PC BOARD		PNP1393

G FUNCTION BOARD ASSY

SEMICONDUCTORS			
	Q701-Q704		DTA124ES
	D701-D703,D706		SEL6210S
COILS			
	L701,L702	FERRITE BEADS	VTH1020
SWITCHES			
	S701-S718		PSG1006
CAPACITORS			
	C704		CKCYB101K50
	C702		CKCYF103Z50
RESISTORS			
	All Resistors		RD1/4PU□□□J
OTHERS			
	IC701	REMOTE RECEIVER UNIT	GP1U27X
	CN701	FFC CONNECTOR 39P	HLEM39R-1
	V701	FL INDICATOR TUBE	PEL1086

H POWER A BOARD ASSY

Mark	No.	Description	Part No.
SEMICONDUCTORS			
⚠	IC904		UPC24M05AHF
⚠	D901-D908		11ES2
COILS			
	L902	FERRITE BEADS	VTH1020
⚠	L11	LINE FILTER	VTL1008
CAPACITORS			
	C901,C902,C914,C915		CKCYF103Z50
	C904-C906,C911	(3300μF,16V)	DCH1057
⚠	C71,C78	(100pF,400V AC)	PCL1040
⚠	C72,C75	(0.01μF,400V AC)	VCG-044
RESISTORS			
	All Resistors		RD1/4PU□□□J

Mark	No.	Description	Part No.
OTHERS			
⚠	H11,H12	FUSE CLIP	AKR1003
⚠	CN12	2P-VH CONNECTOR	B2P3-VH
	J901	EARTH LEAD UNIT	PDF1175
	J12	CONNECTOR	PF07PG-D10
⚠	CN11	TERMINAL	RKC-061
		PCB BINDER	VEF1040
	J905		PDF1176

I POWER B BOARD ASSY

SEMICONDUCTORS			
⚠	IC11-IC15		ICP-N10
⚠	IC23		LM2940CT-5.0
⚠	IC22		NJM7905FA
⚠	D11-D14,D52		11ES2
⚠	D54		MTZJ20A
COILS			
	L21-L23	FERRITE BEADS	VTH1020
CAPACITORS			
	C52		CEAS101M35
	C54		CEAS470M35
	C28,C29		CEAS471M10
	C11,C13,C15-C18		CKCYF103Z50
	C23,C24		COMZA472J50
	C26	(3300μF,16V)	DCH1057
	C25	(10000μF,16V)	VCH1124
RESISTORS			
	Other Resistors		RD1/4PU□□□J
OTHERS			
	CN15	5P JUMPER CONNECTOR	52147-0510
	CN17	KR CONNECTOR 5P	B5B-PH-K-S
⚠	J1	CONNECTOR ASSY 2P	PDE1273
	J16	CONNECTOR 6P	PF06PG-D15
		PCB BINDER	VEF1008
		EARTH METAL	VNF-091

Mark	No.	Description	Part No.

J STRATEGY SMALL BOARD ASSY

SEMICONDUCTORS			
	IC343		TC74HC138AF
	IC344		TC7S04F
	Q3508		2SC2412K
	Q3501-Q3507		DTA124TK
	D332		1SS355
	D331		UDZ3.0B
CAPACITORS			
	C3520		CEV470M16
	C344,C3519,C3521		CKSQYF103Z50
RESISTORS			
	R3514		PCN1039
	R3504		RN1/10SE1502D
	R3510		RN1/10SE1601D
	R3511		RN1/10SE1800D
	R3505		RN1/10SE1801D
	R3503		RN1/10SE1802D
	R3502		RN1/10SE2201D
	R3520		RN1/10SE2400D
	R3506		RN1/10SE2401D
	R3513		RN1/10SE2701D
	R3507		RN1/10SE4701D
	R3512		RN1/10SE5100D
	R3501		RN1/10SE5101D
	R3508		RN1/10SE6201D
	VR3502,VR3503	(10kΩ)	PCP1042
	VR3501	(47kΩ)	PCP1043
	Other Resistors		RS1/10S□□□J
OTHERS			
	CN3502	PH CONNECTOR(2P)	B2B-PH-SM3
	CN3506	PH CONNECTOR(6P)	B6B-PH-SM3

6. ADJUSTMENT

6.1 ADJUSTMENT METHODS

If a compact disc recorder is adjusted incorrectly or inadequately, it may malfunction or not work at all even though there is nothing at all wrong with the pickup or the circuitry. Adjust correctly following the adjustment procedure.

● Measuring instruments and Tools

(1) Dual trace oscilloscope (10 : 1 probe)
(2) Low-frequency oscillator
(3) Test disc (STD-903), (STD-R03)
(4) Low-pass filter (15kΩ + 0.001μF), (39kΩ + 0.001μF)
(5) Hi-pass filter (3.9kΩ + 180pF)
(6) Resistor (100kΩ)
(7) Hexagonal screwdriver (1.27mm diagonal)
(8) Standard tools
(9) Small screwdriver
(10) Multimeter (Voltage accuracy : Below 1 mV)

● Adjustment Items / Verification Items and Order

Adjustment 1

Step	Item	Test Point	Adjustment Location
1	Playback Power Adjustment	CN104 (TP1), Pin 7 (PWAJT)	VR103 (PB. PW)
2	Coarse Focus Offset Adjustment	CN204 (TP201), Pin 1 (RF)	VR105 (FE. OFS)
3	Coarse Skew Adjustment	CN204 (TP201), Pin 1 (RF)	Radial tilt adjustment screw and Tangential tilt adjustment screw
4	Coarse Grating Adjustment	CN104 (TP1), Pin 3 (TE)	Grating adjustment slit
5	DPP (Tracking Offset) Adjustment	CN104 (TP1), Pin 3 (TE)	VR112 (TE. OFS)
6	Fine Focus Offset Adjustment	CN204 (TP201), Pin 1 (RF)	VR105 (FE. OFS)
7	Fine Skew Adjustment	CN204 (TP201), Pin 1 (RF)	Radial tilt adjustment screw and Tangential tilt adjustment screw
8	Grating Re-adjustment	CN104 (TP1), Pin 3 (TE)	Grating adjustment slit

Adjustment 2

Step	Item	Test Point	Adjustment Location
1	CD-R VCO Control Voltage Adjustment	CN331 (TP30), Pin 1 (VCOIN)	VR301 (VCO CON)
2	Multi Pulse Time Adjustment	CN3506, Pin 6 (MPLS)	VR3501 (MPLS DLY)
3	EFM Rising Edge Time Adjustment	CN3506, Pin 5 (EFM IN) CN3506, Pin 4 (SEFM)	VR3502 (EFM DLY)
4	3T Falling Edge Time Adjustment	CN3506, Pin 3 (3T IN) CN3506, Pin 2 (3T OUT)	VR3503 (3T DLY)
5	WBL+ Offset Adjustment	CN104 (TP1), Pin 6 (RWBL)	VR107 (WBL+. OFS)
6	Coarse WBL Offset Adjustment	CN104 (TP1), Pin 5 (WBL)	VR108 (WBL. OFS)
7	Playback Power Re-adjustment	CN104 (TP1), Pin 7 (PWAJT)	VR103 (PB. PW)
8	Coarse Focus Offset Adjustment	CN204 (TP201), Pin 1 (RF)	VR105 (FE. OFS)
9	Main and Sub Mix Ratio Adjustment	CN104 (TP1), Pin 1 (STE) CN104 (TP1), Pin 2 (MSTE)	VR110 (MS. MIX)
10	Tracking Amp. Gain Adjustment	CN104 (TP1), Pin 3 (TE)	VR111 (TE. GAIN)
11	Tracking Offset Adjustment	CN104 (TP1), Pin 3 (TE)	VR112 (TE. OFS)
12	ACT Offset Adjustment	CN5021 (TP00), Pin 1 (ACT ERR)	VR1 (ACT. OFS)
13	ACT GAIN Adjustment	CN5021 (TP00), Pin 1 (ACT ERR)	VR10 (ACT. GAIN)
14	Fine Focus Offset Adjustment	CN204 (TP201), Pin 1 (RF)	VR105 (FE. OFS)
15	WBL BALANCE Adjustment	CN104 (TP1), Pin 5 (WBL)	VR106 (WBL. BALANCE)

Step	Item	Test Point	Adjustment Location
16	Fine WBL Offset Adjustment	CN104 (TP1), Pin 5 (WBL)	VR108 (WBL. OFS)
17	WBL Focus Offset Adjustment	CN104 (TP1), Pin 5 (WBL)	VR115 (WFE. OFS)
18	Recording Power Adjustment	CN104 (TP1), Pin 7 (PWAJT)	VR104 (REC. PW)
19	HF Amp. Gain Adjustment	CN104 (TP1), Pin 8 (HF)	VR119 (HF. GAIN)
20	Focus Servo Loop Gain Adjustment	CN204 (TP201), Pin 5 (FCSIN) CN204 (TP201), Pin 6 (FCSER)	VR201 (FCS. GAIN)
21	Tracking Servo Loop Gain Adjustment	CN204 (TP201), Pin 2 (TRKER) CN204 (TP201), Pin 3 (TRKIN)	VR202 (TE. GAIN)

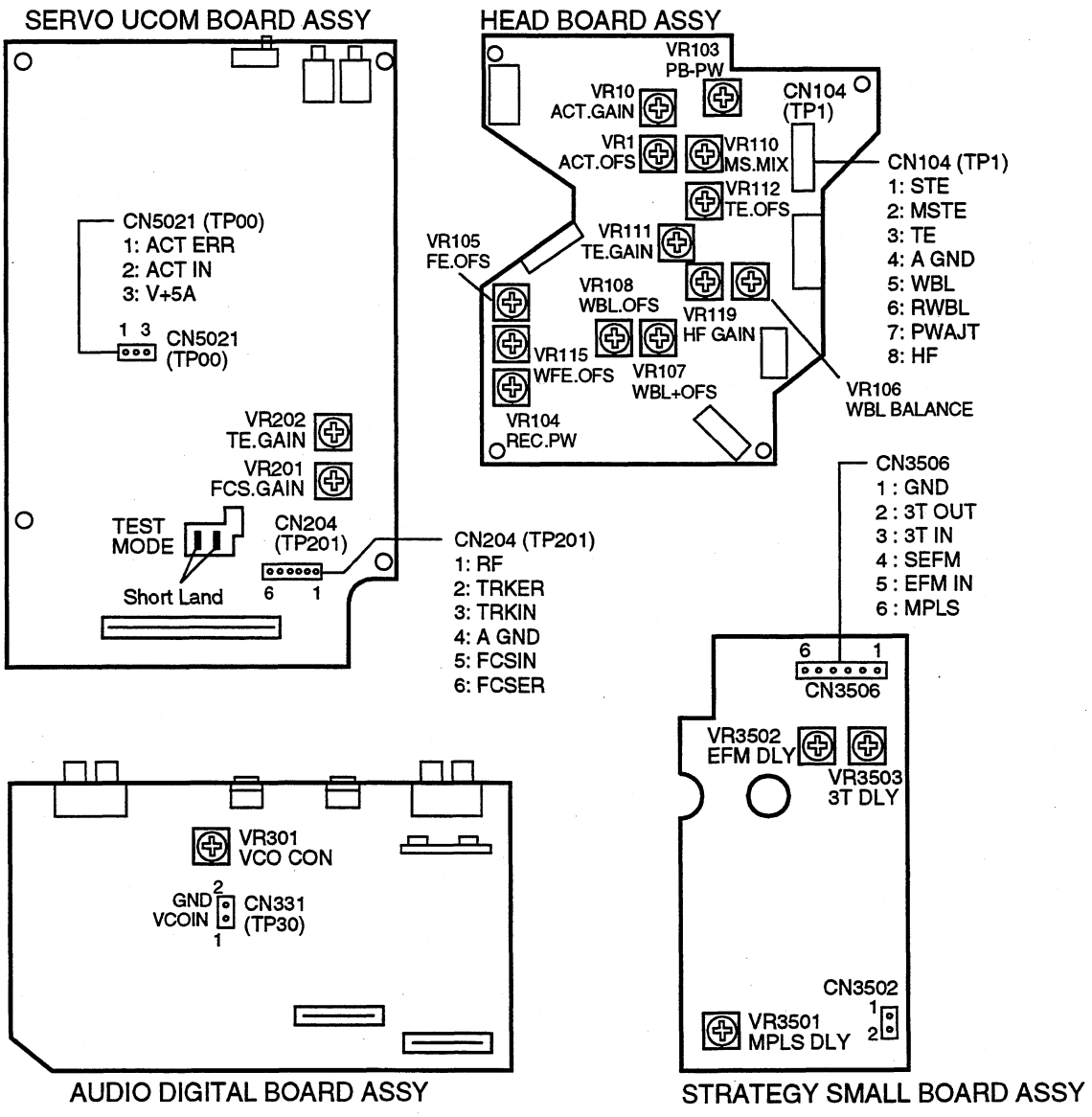

Fig. 1 Adjustment points

● Notes

(1) Use a 10 : 1 probe for the oscilloscope.
(2) All the knob positions (settings) for the oscilloscope in the adjustment procedures are for when a 10 : 1 probe is used.

● Test Mode

This model has a test mode so that the adjustments and checks required for service can be carried out easily.
When this model is in test mode, the keys on the front panel work differently from normal. Adjustments and checks can be carried out by operating these keys with the correct procedure. For this model, all adjustments are carried out in test mode.

[Setting to Test Mode]

How to set this model into test mode.
(1) Unplug the power cord from the AC socket.
(2) Short the test mode short land. (See Fig. 1.)
(3) Plug the power cord back into the AC socket.

When the test mode is set correctly, the display is different from what it usually is when the power is turned on. (lights up all FL display) If the display is still the same as usual, test mode has not been set correctly, so repeat Steps 1 – 3.

[Release from Test Mode]

Here is the procedure for releasing the test mode.
(1) Press the STOP key and stop all operations.
(2) Unplug the power cord from the AC socket.

[Operations of the Keys in Test Mode]

Code	Key Name	Function In Test Mode	Explanation
	DIGITAL SYNCHRO	Playback laser diode ON	Lights up the laser diode by playback power.
	FINALIZE	Focus servo closes	The laser diode is lit up and the focus acutuator is lowered, then raised slowly and the focus servo is closed at the point where the objective lens is focused on the disc. With the player in this state, if you lightly rotate the stopped disc by hand, you can here the sound the focus servo. If you can hear this sound, the focus servo is operating correctly. If you press this key with no disc mounted, the laser diode lights up, the focus acutuator is pulled down, then the acutuator is raised and lowered three times and returned to its original position.
►	PLAY	Spindle servo ON	Starts the spindle motor in the clockwise direction and when the disc rotation reaches the prescribed speed (about 500 rpm at the inner periphery), sets the spindle servo in a closed loop.

Code	Key Name	Function In Test Mode	Explanation
⏸	PAUSE	Tracking servo close/open	Pressing this key when the focus servo and spindle servo are operating correctly in closed loops puts the tracking servo into a closed loop, displays the track number being played back and the elapsed time on the front panel. If the elapsed time is not displayed or not counted correctly, it may be that something is our of adjustment, or that there is some other problem. This key is a toggle key and open/close the tracking servo alternately. This key has no effect if no disc is mounted.
◀◀ • ⏮	MANUAL/ TRACK SEARCH REV	Carriage reverse (inwards)	Moves the pickup position toward the inner diameter of the disc. When this key is pressed with the tracking servo in a closed loop, the tracking servo automatically goes into an open loop. Since the motor does not automatically stop at the mechanical end point in test mode, be careful with this operation.
▶▶ • ⏭	MANUAL/ TRACK SEARCH FWD	Carriage forward (outwards)	Moves the pickup position toward the outer diameter of the disc. When this key is pressed with the tracking servo in a closed loop, the tracking servo automatically goes into an open loop. Since the motor does not automatically stop at the mechanical end point in test mode, be careful with this operation.
■	STOP	Stop	Initializes and the disc rotation stops. The pickup and disc remain where they are when this key is pressed.
⏏	OPEN/CLOSE	Disc tray open/close	Open/close the disc tray. This key is a toggle key and open/close tray alternately. Pressing this key when the disc is turning stops the disc, then opens the tray. This key operation does not affect the position of the pickup.
○ ↓ ○	REC ↓ REC MUTE	Maximum recording power Laser diode ON	Lights up the laser diode with maximum recording power and normal EFM by pressing REC and REC MUTE keys in order. * The laser diode may be damaged if adjustments are made before pressing these keys.
	DISPLAY OFF	Focus offset switching	Switches the focus offset state. DISPLAY OFF LED Lights UP : C/N in the best condition Lights OFF : Jitter in the best condition
	WRITE	Optical axis servo switching	Switches the ON/OFF of the optical axis servo. (MANUAL) LED Lights UP : Optical axis servo ON Lights OFF : Optical axis servo OFF

[How to Play Back a Disc in Test Mode]

In test mode, since the servos operate independently, playing back a disc requires that you operate the keys in the correct order to close the servos.

Here is the key operation sequence for playing back a disc in test mode.

FINALIZE — Lights up the laser diode and closes the focus servo.

⇩

PLAY ▶ — Starts the spindle motor and closes the spindle servo.

⇩

PAUSE ⏸ — Closes the tracking servo.

Wait at least 2 – 3 seconds between each of these operations.

6.2 Adjustment 1

6.2.1 Playback Power Adjustment

• **Objective**	To optimize the playback power of the laser diode.		
• **Symptom when out of adjustment**	Play does not start, track search is impossible, track are skipped.		
• **Measurement instrument connections**	Connect the multimeter to CN104 (TP1), Pin 7 (PWAJT)	• **Player state** • **Adjustment location** • **Disc**	Test mode, Playback laser diode ON VR103 (PB. PW) (HEAD BOARD assy) None needed

[Procedure]

When adjusting with the multimeter.

(1) Lights up the playback laser diode using the DIGITAL SYNCHRO key.

(2) Adjust the voltage value of Pin 7 (PWAJT) of CN104 (TP1) to the voltage value (PB PW voltage ± 5mV) displayed on the pickup flexible cable using VR103 (PB PW).

Note) This adjustment cannot be performed accurately if disc is set. Be sure to remove disc first before adjustments.

Reference: When adjusting with the optical power meter.

(1) Move the pickup to the outer edge of the disc with the MANUAL / TRACK SEARCH FWD ►► ►►I key.

(2) Lights up the playback laser diode by DIGITAL SYNCHRO key.

(3) Shine the light discharged from the objective lens in the pickup on the light power meter sensor. Adjust VR103 (PB. PW) so that the playback laser diode output is an average 0.6 mW ± 0.05mW.
(Wavelength 790nm, Average mode)

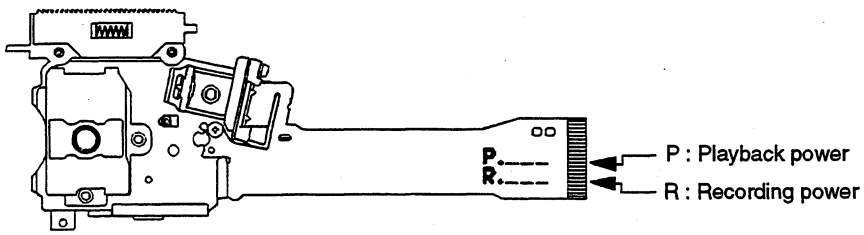

* Recording on the disc is not possible in test mode.

6.2.2 Coarse Focus Offset Adjustment

Adjustment 1

• **Objective**	To coarse adjust the DC offset voltage of the focus servo circuit for perform the tracking and slider adjustments correctly.		
• **Symptom when out of adjustment**	The model does not focus in, sound broken and the RF signal is dirty.		
• **Measurement instrument connections**	Connect the oscilloscope to CN204 (TP201), Pin 1 (RF) (SERVO UCOM BOARD assy) [Settings] 20 mV/div. 2 mS/div. DC mode	• **Player state** • **Adjustment location** • **Disc**	Test mode,focus and spindle servos closed and tracking servo open. VR105 (FE. OFS) (HEAD BOARD assy) STD-903

[Procedure]

(1) Press the FINALIZE key, then the PLAY ► key in that order to close the focus servo then the spindle servo.

(2) Adjust VR105 (FE. OFS) so that the amplitude of waveform at CN204 (TP201), Pin 1 (RF) is maximum.

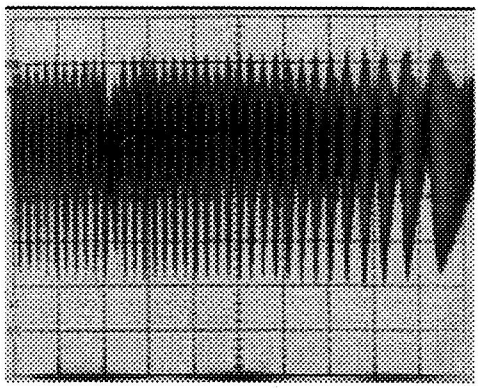

Out of adjustment

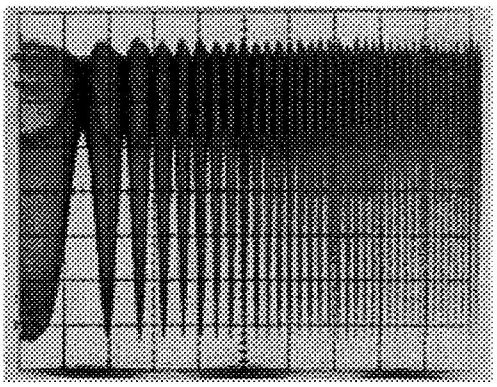

Optimum adjustment

6.2.3 Coarse Skew Adjustment

Adjustment 1

• **Objective** • **Symptom when out of adjustment**	To coarse adjust the angle of pickup to the disc for perform the grating and DPP (tracking offset) adjustments correctly. Sound broken, some discs can be played but not others.		
• **Measurement instrument connections**	Connect the oscilloscope to CN204 (TP201), Pin 1 (RF) (SERVO UCOM BOARD assy) [Settings] 20 mV/div. 200 nS/div. AC mode	• **Player state** • **Adjustment location** • **Disc**	Test mode,focus and spindle servos closed and tracking servo open. Radial adjustment screw and tangential adjustment screw STD-903

[Procedure]

(1) Move the pickup to the position where the radial/tangential adjustment screws will be seen with the MANUAL / TRACK SEARCH FWD ►► ►►I or REV I◄◄ ◄◄ keys so that the radial/tangential adjustment screws can be adjusted.
(2) Press the FINALIZE key, then the PLAY ► key in that order to close the focus servo then the spindle servo.
(3) Adjust the RAD (radial direction) and TAN (tangential direction) adjustment screws alternately with hexagonal screwdriver (1.27 mm diagonal) to maximize the RF output at CN204 (TP201), Pin 1.

Note : Radial direction and tangential direction mean the direction relative to the disc shown in Fig. 2.

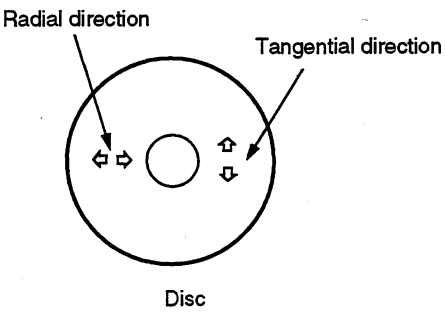

Fig. 2

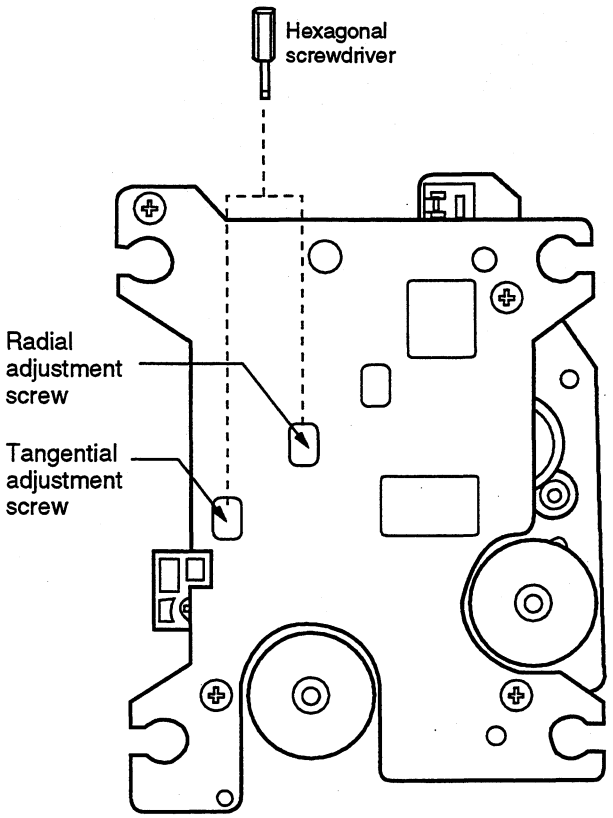

6.2.4 Coarse Grating Adjustment

Adjustment 1

• **Objective**	To align the tracking error generation laser beam spots to the optimum angle on the track.		
• **Symptom when out of adjustment**	Play does not start, track search is impossible, tracks are skipped.		
• **Measurement instrument connections**	Connect the oscilloscope to CN104 (TP1), Pin 3 (TE) This connection may be via a low pass filter. (See Fig. 3) [Settings] 50 mV/div. 5 mS/div. DC mode	• **Player state** • **Adjustment location** • **Disc**	Test mode,focus and spindle servos closed and tracking servo open. Grating slit on pickup STD-903

[Procedure]

(1) Move the pickup to the position where the grating adjustment slit will be seen with the MANUAL / TRACK SEARCH FWD ▶▶ ▶▶| or REV |◀◀ ◀◀ keys so that the grating adjustment can be adjusted.

(2) Press the FINALIZE key, then the PLAY ▶ key in that order to close the focus servo then spindle servo.

(3) Insert a screwdriver into the grating adjustment slit and adjust the grating to find the null point.
For more details, see next page.

(4) If you slowly turn the screwdriver clockwise from the null point, the amplitude of the wave gradually increases, then if you continue turning the screwdriver, the amplitude of the wave becomes smaller again. Turn the screwdriver counterclockwise from the null point and set the grating to the first point where the wave amplitude reaches its maximum.
Reference : Fig. 4 shows the relation between the angle of the tracking beam with the track and the waveform.

(5) Return the pickup to more or less midway across disc with the MANUAL / TRACK SEARCH |◀◀ ◀◀ key, press the PAUSE ▮▮ key and check that the track number and elapsed time are displayed on the front panel. If they are not displayed at this time or the elapsed time changes irregularly, check the null point and adjust the grating again.

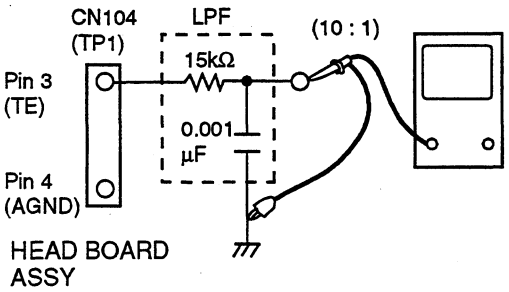

Fig. 3

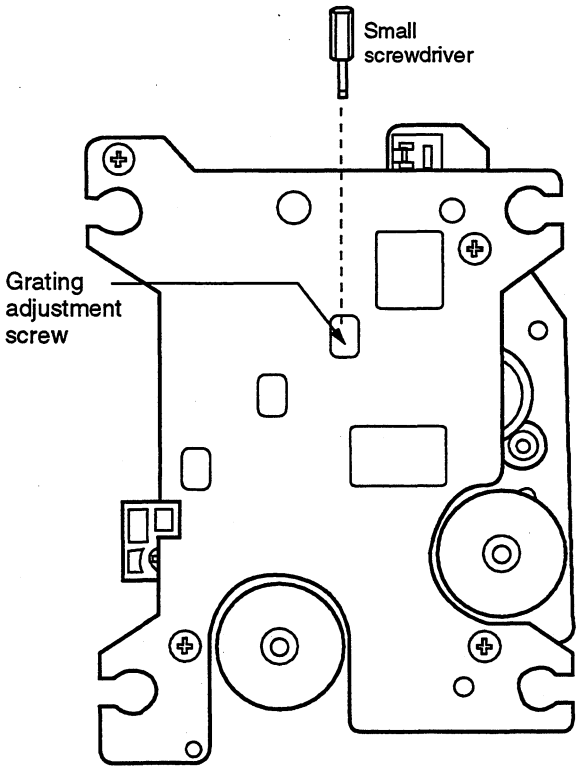

Adjustment 1

[How to find the null point]

When you insert the small screwdriver into the slit for the grating adjustment and change the grating angle, the amplitude of the tracking error signal at CN104 (TP1), Pin 3 (TE) changes. Within the range for the grating, there are five or six locations where the amplitude of the wave reaches a minimum. Of these five or six locations, there is only one at which the envelope of the waveform is smooth. This location is where the three laser beams divided by the grating are all right above the same track. (See Fig. 4.)

This point is called the null point. When adjusting the grating, this null point is found and used as the reference position.

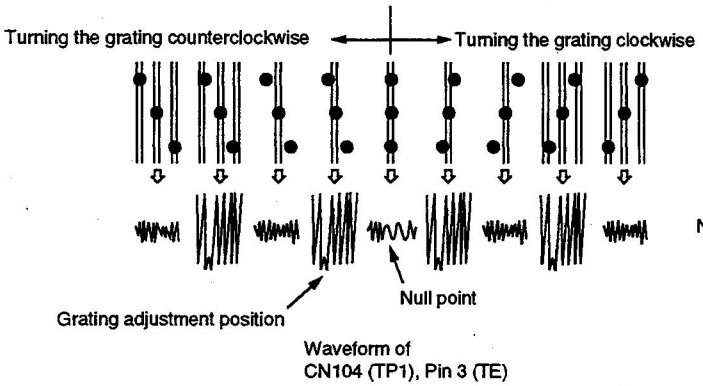

Note : If the difference between the amplitude of the error signal at the innermost edge and outermost edge of the disc is more than 10%, adjust the grating again.

Fig. 4

6.2.5 DPP (Tracking Offset) Adjustment

Adjustment 1

• **Objective**	To correct for the variation in the sensitivity of the tracking photodiode.		
• **Symptom when out of adjustment**	Play does not playback, track search is impossible, tracks are skipped.		
• **Measurement instrument connections**	Connect the oscilloscope to CN104 (TP1), Pin 3 (TE) [This connection may be via a low pass filter. (15kΩ + 0.001μF)] [Settings] 50 mV/div. 5 mS/div. DC mode	• **Player state**	Test mode,focus and spindle servos closed and tracking servo open.
		• **Adjustment location**	VR112 (TE. OFS) (HEAD BOARD assy)
		• **Disc**	STD-903

[Procedure]

(1) Move the pickup to the midway across the disc (R = 35mm) with the MANUAL / TRACK SEARCH FWD ►► ►►I or REV I◄◄ ◄◄ keys.

(2) Press the FINALIZE key, then the PLAY ► key in that order to close the focus servo then spindle servo.

(3) Line up the bright line (ground) at the center of the oscilloscope screen and put the oscilloscope into DC mode.

(4) Adjust VR112 (TE. OFS) so that the positive amplitude and negative amplitude of the tracking error signal at CN104 (TP1), Pin 3 (TE) are the same (in other words, so that there is no DC component).

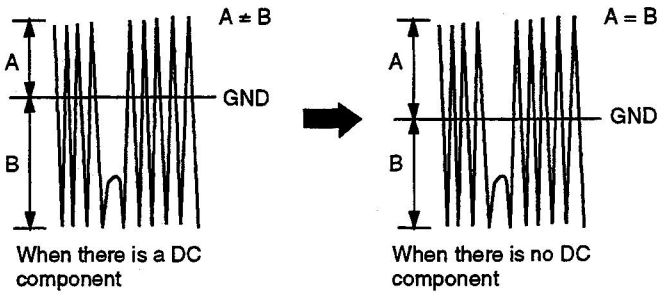

6.2.6 Fine Focus Offset Adjustment

Adjustment 1

• **Objective**	To optimize the DC offset voltage of the focus servo circuit.		
• **Symptom when out of adjustment**	The player does not focus in, sound broken and the RF signal is dirty.		
• **Measurement instrument connections**	Connect the oscilloscope to CN204 (TP201), Pin 1 (RF). (SERVO UCOM BOARD assy) [Settings] 20 mV/div. 500 nS/div. AC mode	• **Player state** • **Adjustment location** • **Disc**	Test mode, play VR105 (FE. OFS) (HEAD BOARD assy) STD-903

[Procedure]

(1) Move the pickup to midway across the disc (R = 35mm) with the MANUAL / TRACK SEARCH FWD ►► ►►I or REV I◄◄ ◄◄ keys.

(2) Press the FINALIZE key, the play ► key, then the PAUSE ▮▮ key in that order to close the respective servos and put the player into play mode.

(3) Adjust VR105 (FE. OFS) so that the 3T waveform at CN204 (TP201), Pin 1 (RF) is maximum.

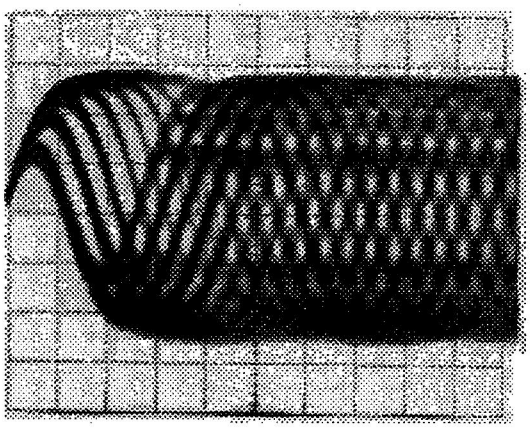

Out of adjustment

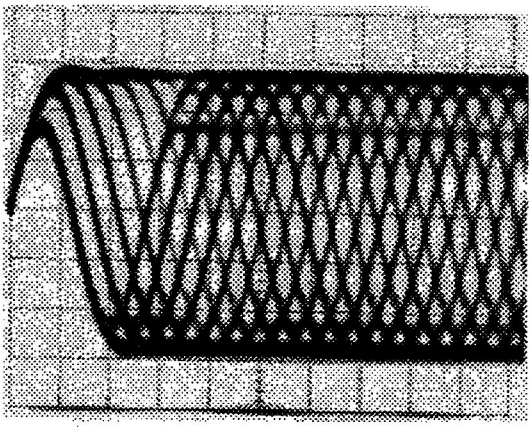

Optimum adjustment

6.2.7 Fine Skew Adjustment

Adjustment 1

• **Objective**	To adjust the angle of the pickup relative to the disc so that the laser beams are shone straight down into the disc for the best read out of the RF signals.		
• **Symptom when out of adjustment**	Sound broken, some discs can be played but not others.		
• **Measurement instrument connections**	Connect the oscilloscope to CN204 (TP201), Pin 1 (RF) (SERVO UCOM BOARD assy) [Settings] 20 mV/div. 200 nS/div. AC mode	• **Player state** • **Adjustment location** • **Disc**	Test mode, play Pickup radial adjustment screw and tangential adjustment screw STD-903

[Procedure]

(1) Move the pickup to the position where the radial/tangential adjustment screws will be seen with the MANUAL / TRACK SEARCH FWD ►► ►►I or REV I◄◄ ◄◄ keys so that the radial/tangential adjustment screws can be adjusted.

(2) Press the FINALIZE key, then the PLAY ► key to the PAUSE ❚❚ key in that order to close the respective servos and put the player into play mode.

(3) First, adjust the radial adjustment screw with the hexagonal screwdriver (1.27 mm) so that the eye pattern (the diamond shape at the center of the RF signal) can be seen the most clearly.

(4) Next, adjust the tangential adjustment screw with the hexagonal screwdriver so that the eye pattern can be seen the most clearly. (Fig. 5).

(5) Adjust in the order of the radial adjustment screw and the tangential screw again, so that the eye pattern can be seen the most clearly. As necessary, adjust the two screws alternately so that the eye pattern can be seen the most clearly.

(6) After the adjustment, remove the float screw, turn over the servo mechanism assembly, then stabilize the radial adjustment screw and the tangential adjustment screw with an adhesive.

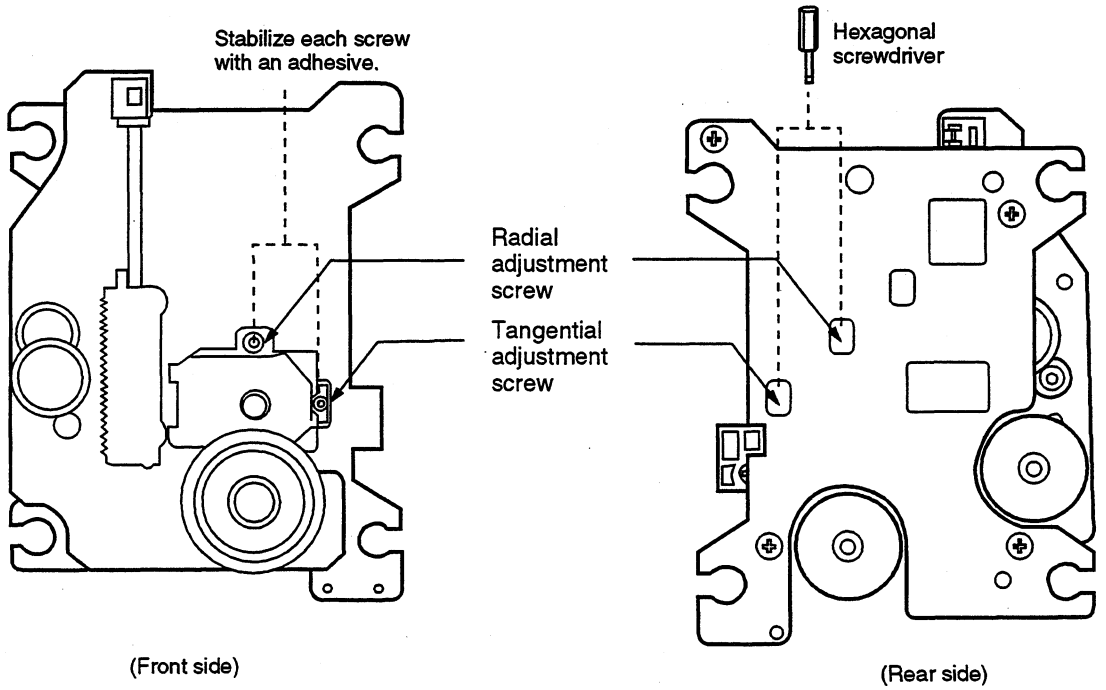

Adjustment 1

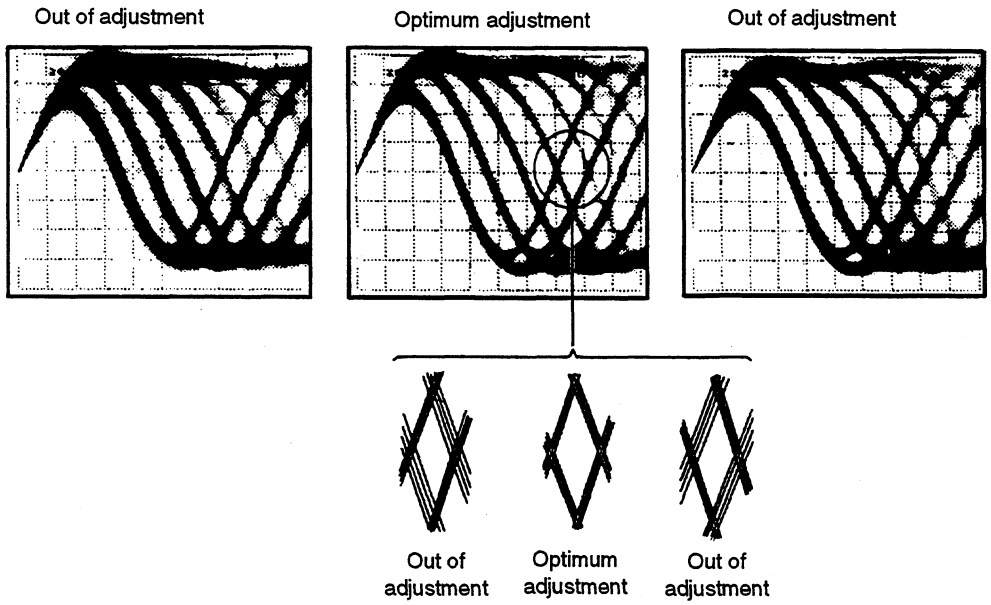

Fig. 5 Eye pattern

6.2.8 Grating Re-adjustment

Adjustment 1

Adjust in the same manner as "4. Coarse Grating Adjustment " in Adjustment 1.

6.3 Adjustment 2

6.3.1 CD-R VCO Control Voltage Adjustment

Adjustment 2

• **Objective**	To optimize the CD-R VCO control voltage adjustment of VCO IC.		
• **Symptom when out of adjustment**	Player does not record or playback CD-R discs.		
• **Measurement instrument connections**	Connect the multimeter to CN331 (TP30), Pin 1 (VCOIN) (AUDIO DIGITAL BOARD assy)	• **Player state**	Test mode, stop
		• **Adjustment location**	VR301 (VCOIN) (AUDIO DIGITAL BOARD assy)
		• **Disc**	None needed

[Procedure]

(1) Adjust VR301 (VCO CON) so that the voltage at Pin 1 (VCOIN) of CN331 (TP30) becomes 2.5 ± 0.1V.

6.3.2 Multi Pulse Time Adjustment

Adjustment 2

• **Objective** • **Symptom when out of adjustment**	Pulse adjustment for recording (1) Player does not playback CD-R discs which was recorded with this player .		
• **Measurement instrument connections**	Connect the oscilloscope to CN3506, Pin 6 (MPLS). (STRATEGY SMALL BOARD assy) [Settings] 1 mV/div. 20 nS/div. DC mode	• **Player state** • **Adjustment location** • **Disc**	Test mode, stop VR3501 (MPLS DLY) (STRATEGY SMALL BOARD assy) None needed

[Procedure]

(1) Disconnect a connector CN3502.
(2) Adjust the time from rising edge to falling edge of Waveform with 2V level.
(3) Adjust VR3501 (MPLS DLY) so that the DC voltage at CN3506 pin 6 (MPLS) becomes 70nS ± 3nS.

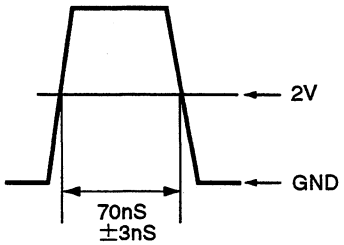

6.3.3 EFM Rising Edge Time Adjustment

Adjustment 2

• **Objective** • **Symptom when out of adjustment**	Pulse adjustment for recording (2) Player does not playback CD-R discs which was recorded with this player .		
• **Measurement instrument connections**	Connect the oscilloscope to CH1 : CN3506, Pin 5 (EFM IN). CH2 : CN3506, Pin 4 (SEFM). (STRATEGY SMALL BOARD assy) [Settings] CH1 : 1 V/div. DC mode 20 nS/div. CH2 : 1 V/div. DC mode	• **Player state** • **Adjustment location** • **Disc**	Test mode, recording power ON VR3502 (EFM DLY) (STRATEGY SMALL BOARD assy) None needed

[Procedure]

(1) Disconnect a connector CN3502.
(2) Turn VR104 (REC. PW) fully counterclockwise to reduce the power is minimum.
(3) Press REC ○ and REC MUTE ● keys in this order to lights up the laser diode.
(4) Adjust the time from rising edge of CN3506 pin 5 to rising edge of pin 4 of waveform with 2V level.
(5) Adjust VR3502 (EFM DLY) so that the DC voltage becomes 80nS ± 3nS.

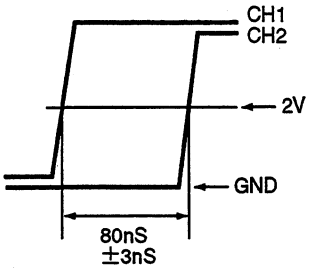

6.3.4 3T Falling Edge Time Adjustment

Adjustment 2

• **Objective**	Pulse adjustment for recording (3)		
• **Symptom when out of adjustment**	Player does not playback CD-R discs which was recorded with this player .		
• **Measurement instrument connections**	Connect the oscilloscope to CH1 : CN3506, Pin 3 (3T IN). CH2 : CN3506, Pin 2 (3T OUT). (STRATEGY SMALL BOARD assy) [Settings] CH1 : 1 V/div. DC mode 20 nS/div. CH2 : 1 V/div. DC mode	• **Player state** • **Adjustment location** • **Disc**	Test mode, recording power ON VR3503 (3T DLY) (STRATEGY SMALL BOARD assy) None needed

[Procedure]

(1) Disconnect a connector CN3502.
(2) Turn VR104 (REC. PW) fully counterclockwise to reduce the power is minimum.
(3) Press REC ○ and REC MUTE ○ keys in this order to lights up the laser diode.
(4) Adjust the time from falling edge of CN3506 pin 3 to falling edge of pin 2 of waveform with 2V level.
(5) Adjust VR3503 (3T DLY) so that the DC voltage becomes 40nS ± 3nS.

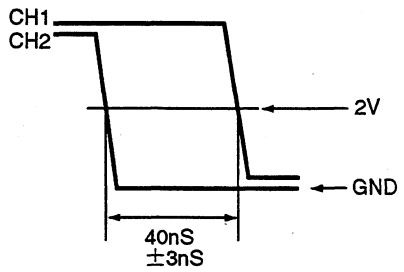

6.3.5 WBL+ Offset Adjustment

Adjustment 2

• **Objective**	To adjust the gain balance of the wobble signal.		
• **Symptom when out of adjustment**	Player does not record or playback CD-R discs.		
• **Measurement instrument connections**	Connect the oscilloscope to CN104 (TP1), Pin 6 (RWBL). (HEAD BOARD assy) [Settings] 1 mV/div. 5 mS/div. DC mode	• **Player state** • **Adjustment location** • **Disc**	Test mode, stop VR107 (WBL+. OFS) (HEAD BOARD assy) None needed

[Procedure]

(1) Turn VR108 (WBL. OFS) to fully counterclockwise.
(2) Adjust VR107 (WBL+. OFS) so that the DC voltage at CN104 (TP1), Pin 6 (RWBL) is –20mV ± 10mV.

6.3.6 Coarse WBL Offset Adjustment

Adjustment 2

• **Objective** • **Symptom when out of adjustment**	To optimize the DC offset voltage of the wobble amp. Player does not record or playback CD-R discs.		
• **Measurement instrument connections**	Connect the oscilloscope to CN104 (TP1), Pin 5 (WBL). (HEAD BOARD assy) [Settings] 1 mV/div. 5 mS/div. DC mode	• **Player state** • **Adjustment location** • **Disc**	Test mode, stop VR108 (WBL. OFS) (HEAD BOARD assy) None needed

[Procedure]

(1) Adjust VR108 (WBL. OFS) so that the DC voltage at Pin 5 (WBL) of CN104 (TP1) becomes 0 ± 10mV.

6.3.7 Playback Power Re-adjustment

Adjustment 2

Adjust in the same manner as "1. Playback Power Adjustment " in Adjustment 1.

6.3.8 Coarse Focus Offset Adjustment

Adjustment 2

• **Objective** • **Symptom when out of adjustment**	To optimize the DC offset voltage of the focus error amp. The player does not focus in add the RF signal is dirty.		
• **Measurement instrument connections**	Connect the oscilloscope to CN204 (TP201), Pin 1 (RF). (SERVO UCOM BOARD assy) [Settings] 20 mV/div. 2 mS/div. DC mode	• **Player state** • **Adjustment location** • **Disc**	Test mode, focus and spindle servos closed and tracking servo open. VR105 (FE. OFS) (HEAD BOARD assy) STD-903

[Procedure]

(1) Press the FINALIZE key, then the PLAY ► key in that order to close the focus servo then the spindle servo.
(2) Adjust VR105 (FE. OFS) so that the amplitude of RF signal at CN204 (TP201), Pin 1 (RF) is maximum.

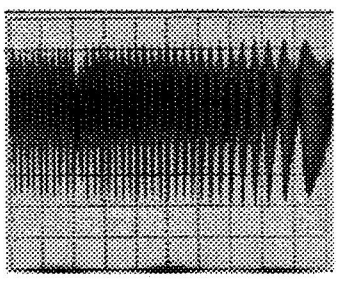

Out of adjustment

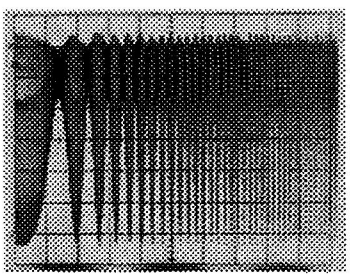

Optimum adjustment

6.3.9 Main and Sub Mix Ratio Adjustment

Adjustment 2

• **Objective**	To mix the gain of the main signal output and sub signal output of the pickup.		
• **Symptom when out of adjustment**	Player does not playback.		
• **Measurement instrument connections**	Connect the oscilloscope to CH1: CN104 (TP1), Pin 1 (STE) CH2: CN104 (TP1), Pin 2 (MSTE) [These connections must be via low pass filters.] [Settings] CH1 : 50 mV/div. AC mode 10 mS/div. ADD mode CH2 : 100 mV/diV. AC mode	• **Player state** • **Adjustment location** • **Disc**	Test mode, focus and spindle servos closed and tracking servo open VR110 (MS. MIX) (HEAD BOARD assy) STD-903

[Procedure]

(1) Press the FINALIZE key, then the PLAY ► key in that order to close the focus servo then the spindle servo.
(2) Set the oscilloscope to ADD mode (waveform adding mode of CH1 and CH2) and observe the adding waveform of CH1 and CH2.
(3) Adjust VR110 (MS. MIX) so that the amplitude of waveform becomes minimum.

6.3.10 Tracking Amp. Gain Adjustment

Adjustment 2

• **Objective**	To correct the discrepancy in the tracking error level with the pickup.		
• **Symptom when out of adjustment**	Player does not playback, track search is impossible, tracks are skipped.		
• **Measurement instrument connections**	Connect the oscilloscope to CN104 (TP1), Pin 3 (TE) [These connection must be via a low pass filter (15kΩ + 0.001μF).] [Settings] 20 mV/div. 5 mS/div. DC mode	• **Player state** • **Adjustment location** • **Disc**	Test mode, focus and spindle servos closed and tracking servo open VR111 (TE. GAIN) (HEAD BOARD assy) STD-903

[Procedure]

(1) Move the pickup to midway across the disc (R = 35mm) with the MANUAL / TRACK SEARCH FWD ►► ►►I or REV I◄◄ ◄◄ keys.
(2) Press the FINALIZE key, then the PLAY ► key in that order to close the focus servo then the spindle servo.
(3) Line up the bright line (ground) at the center of the oscilloscope screen and put the oscilloscope into DC mode.
(4) Adjust VR111 (TE. GAIN) so that the positive amplitude and negative amplitude of the tracking error signal at CN104 (TP1), Pin 3 (TE) is 1.0V ± 0.05V.

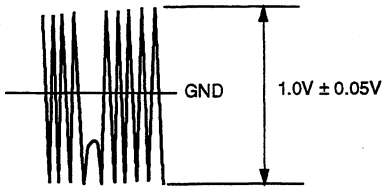

6.3.11 Tracking Offset Adjustment

Adjustment 2

• **Objective**	To correct for the variation in the sensitivity of the tracking photodiode.		
• **Symptom when out of adjustment**	Player does not playback, track search is impossible, tracks are skipped.		
• **Measurement instrument connections**	Connect the oscilloscope to CN104 (TP1), Pin 3 (TE). [This connection must be via a low pass filter (15kΩ + 0.001μF).] [Settings] 20 mV/div. 5 mS/div. DC mode	• **Player state** • **Adjustment location** • **Disc**	Test mode, focus and spindle servos closed and tracking servo open. VR112 (TE. OFS) (HEAD BOARD assy) STD-903

[Procedure]

(1) Move the pickup to midway across the disc (R = 35mm) with the MANUAL / TRACK SEARCH FWD ►► ►►I or REV I◄◄ ◄◄ keys.
(2) Press the FINALIZE key, then the PLAY ► key in that order to close the focus servo then the spindle servo.
(3) Line up the bright line (ground) at the center of the oscilloscope screen and put the oscilloscope into DC mode.
(4) Adjust VR112 (TE. OFS) so that the positive amplitude and negative amplitude of the tracking error signal at CN104 (TP1), Pin 3 (TE) are the same (in other words, so that there is no DC component).

Note : Perform the run-on adjustment in the section 7 and 8.

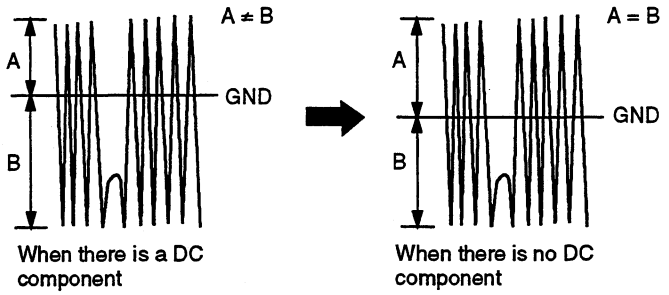

When there is a DC component

When there is no DC component

6.3.12 ACT Offset Adjustment

Adjustment 2

• **Objective**	To optimize the DC offset voltage of the actuator servo.		
• **Symptom when out of adjustment**	Player does not pause, track search is impossible, tracks are skipped.		
• **Measurement instrument connections**	Connect the oscilloscope to CN5021 (TP00), Pin 1 (ACT ERR). (SERVO UCOM BOARD assy) [Settings] 5 mV/div. 5 mS/div. DC mode	• **Player state** • **Adjustment location** • **Disc**	Test mode, focus and spindle servos closed and tracking servo open. VR1 (ACT. OFS) (HEAD BOARD assy) STD-903

[Procedure]

(1) Move the pickup to midway across the disc (R = 35mm) with the MANUAL / TRACK SEARCH FWD ►► ►►I or REV I◄◄ ◄◄ keys.
(2) Press the FINALIZE key, then the PLAY ► key in that order to close the focus servo then the spindle servo.
(3) Adjust VR1 (ACT. OFS) so that the DC voltage at CN5021 (TP00), Pin 1 (ACT ERR) is 0 ± 20mV.

6.3.13 ACT Gain Adjustment

Adjustment 2

• **Objective**	To optimize the actuator servo gain.		
• **Symptom when out of adjustment**	Player does not pause, track search is impossible, tracks are skipped.		
• **Measurement instrument connections**	Connect the oscilloscope to CN5021 (TP00), Pin 1 (ACT ERR). (SERVO UCOM BOARD assy) [Settings] 10 mV/div. 5 mS/div. DC mode	• **Player state** • **Adjustment location** • **Disc**	Test mode, focus and spindle servos closed and tracking servo open. VR10 (ACT. GAIN) (HEAD BOARD assy) STD-903

[Procedure]

(1) Move the pickup to midway across the disc (R = 35mm) with the MANUAL / TRACK SEARCH FWD ►► ►►I or REV I◄◄ ◄◄ keys.
(2) Press the FINALIZE key, then the PLAY ► key in that order to close the focus servo then the spindle servo.
(3) Press the WRITE key to light up the WRITE KEY LED, and short-circuit the Pin 2 and Pin 3 of CN5021 (TP00).
(4) Adjust VR10 (ACT. GAIN) so that the DC voltage at CN5021 (TP00), Pin 1 (ACT ERR) is –380 ± 20mV.
Note : Perform the run-on adjustment in the section 9 and 10.

6.3.14 Fine Focus Offset Adjustment

Adjustment 2

• **Objective**	To optimize the DC offset voltage of the focus servo circuit.		
• **Symptom when out of adjustment**	The player does not focus in, sound broken and the RF signal is dirty.		
• **Measurement instrument connections**	Connect the oscilloscope to CN204 (TP201), Pin 1 (RF). (SERVO UCOM BOARD assy) [Settings] 20 mV/div. 500 nS/div. AC mode	• **Player state** • **Adjustment location** • **Disc**	Test mode, play VR105 (FE. OFS) (HEAD BOARD assy) STD-R03

[Procedure]

(1) Move the pickup to midway across the disc (R = 35mm) with the MANUAL / TRACK SEARCH FWD ►► ►►I or REV I◄◄ ◄◄ keys.

(2) Press the FINALIZE key, the PLAY ► key, then the PAUSE ▮▮ key in that order to close the respective servos and put the player into play mode.

(3) Adjust VR105 (FE. OFS) so that the 3T waveform at CN204 (TP201), Pin 1 (RF) is maximum.

Note : Adjust after confirming that the WRITE KEY LED is OFF.

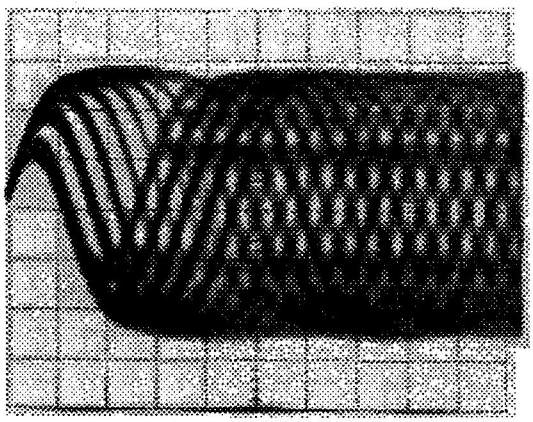

Out of adjustment

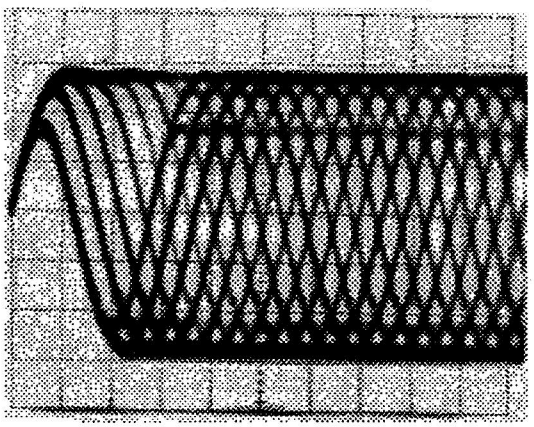

Optimum adjustment

6.3.15 WBL Balance Adjustment

Adjustment 2

• **Objective**	To adjust the gain balance of the wobble signal.		
• **Symptom when out of adjustment**	Player does not record or search or pause CD-R discs.		
• **Measurement instrument connections**	Connect the oscilloscope to CN104 (TP1), Pin 5 (WBL). [This connection must be via a high-pass filter (180pF+3.9kΩ).] [Settings] 5 mV/div. 20 µS/div. DC mode	• **Player state** • **Adjustment location** • **Disc**	Test mode, play VR106 (WBL. BALANCE) (HEAD BOARD assy) STD-R03

[Procedure]

(1) Move the pickup to midway across the disc (R = 35mm) with the MANUAL / TRACK SEARCH FWD ►► ►►I or REV I◄◄ ◄◄ keys.

(2) Press the FINALIZE key, the PLAY ► key, then the PAUSE ▮▮ key in that order to close the respective servos and put the player into play mode.

(3) Adjust VR106 (WBL. BALANCE) so that the amplitude of waveform at CN104 (TP1), Pin 5 (WBL) is minimum.

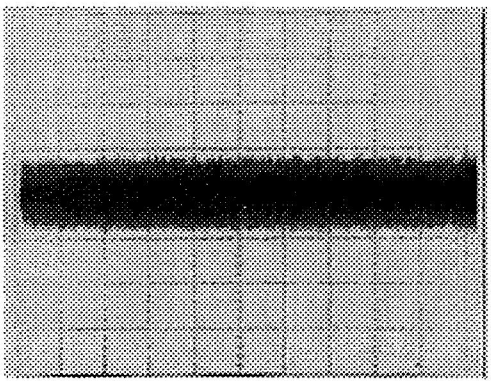

Out of adjustment

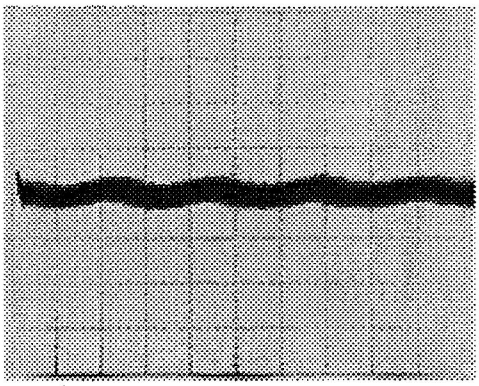

Optimum adjustment

6.3.16 Fine WBL Offset Adjustment

Adjustment 2

• **Objective**	To adjust the gain balance of the wobble signal.		
• **Symptom when out of adjustment**	Player does not record or search or pause CD-R discs.		
• **Measurement instrument connections**	Connect the oscilloscope to CN104 (TP1), Pin 5 (WBL). [This connection must be via a high-pass filter (180pF+3.9kΩ).] [Settings] 5 mV/div. 20 µS/div. DC mode	• **Player state** • **Adjustment location** • **Disc**	Test mode, play VR108 (WBL. OFS) (HEAD BOARD assy) STD-R03

[Procedure]

(1) Move the pickup to midway across the disc (R = 35mm) with the MANUAL / TRACK SEARCH FWD ►► ►►I or REV I◄◄ ◄◄ keys.

(2) Press the FINALIZE key, the PLAY ► key, then the PAUSE ▮▮ key in that order to close the respective servos and put the player into play mode.

(3) Adjust VR108 (WBL. OFS) so that the amplitude of waveform at CN104 (TP1), Pin 5 (WBL) is minimum.

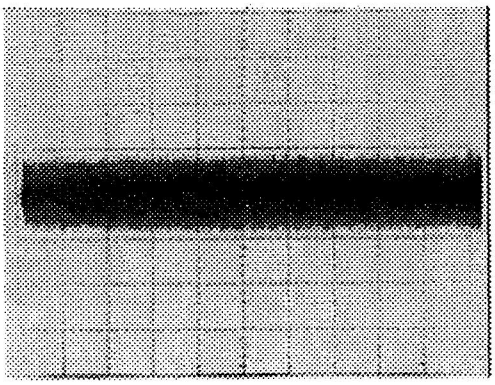

Out of adjustment

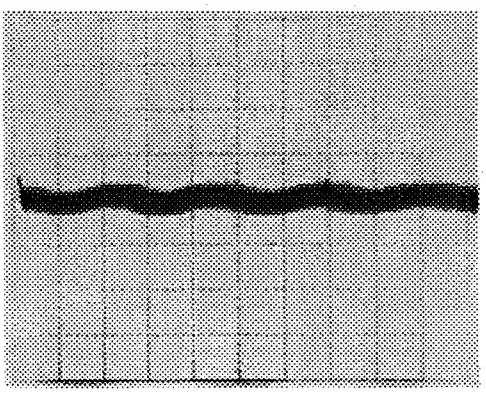

Optimum adjustment

6.3.17 WBL Focus Offset Adjustment

Adjustment 2

• **Objective**	To adjust the gain balance of the wobble signal.		
• **Symptom when out of adjustment**	Player does not record or search or pause CD-R discs.		
• **Measurement instrument connections**	Connect the oscilloscope to CN104 (TP1), Pin 5 (WBL). [This connection must be via a high-pass filter (180pF+3.9kΩ).] [Settings] 5 mV/div. 20 µS/div. DC mode	• **Player state** • **Adjustment location** • **Disc**	Test mode, play VR115 (WFE. OFS) (HEAD BOARD assy) STD-R03

[Procedure]

(1) Move the pickup to midway across the disc (R = 35mm) with the MANUAL / TRACK SEARCH FWD ►► ►►I or REV I◄◄ ◄◄ keys.

(2) Press the FINALIZE key, the PLAY ► key, then the PAUSE ▮▮ key in that order to close the respective servos and put the player into play mode.

(3) Press the DISPLAY OFF key to light up the DISPLAY OFF KEY LED.

(4) Adjust VR115 (WFE. OFS) so that the amplitude of waveform at CN104 (TP1), Pin 5 (WBL) is minimum.

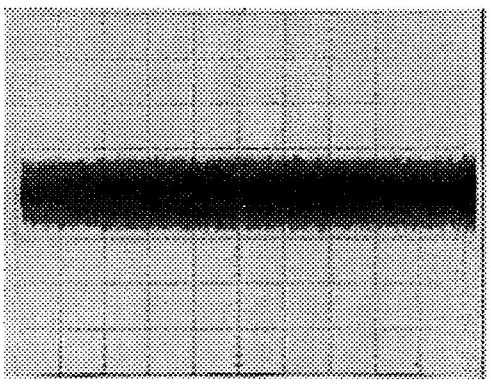

Out of adjustment

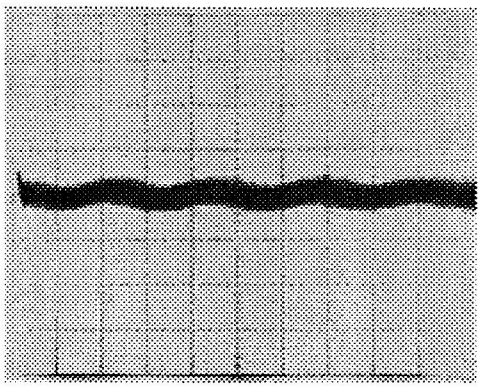

Optimum adjustment

6.3.18 Recording Power Adjustment

Adjustment 2

• **Objective**	To optimize the recording power of the laser diode.		
• **Symptom when out of adjustment**	The player does not record nor playback self-recorded discs. It also skips tracks and the RF waveform is dirty. (No problem during CD playback)		
• **Measurement instrument connections**	Connect the multimeter to CN104 (TP1), Pin 7 (PWAJT).	• **Player state**	Test mode, maximum recording power ON
		• **Adjustment location**	VR104 (REC. PW) (HEAD BOARD assy)
		• **Disc**	None needed

[Procedure]

When Adjusting with the multimeter

(1) Fully turn VR104 (REC. PW) counterclockwise to reduce the power to the minimum.

(2) Press REC ○ and REC MUTE ● keys in this order to lights up the laser diode.

(3) Adjust the voltage value of Pin 7 (PWAJT) of CN104 (TP1) to the voltage value (REC. PW voltage ± 10mV) displayed on the pickup flexible cable using VR104 (REC. PW).

Notes:

- Power more than ten times greater than playback power is released during these adjustment. Never look directly at the objective lens.
- This adjustment cannot be performed accurately if disc is set. Be sure to remove disc first before adjustments.
- Perform this adjustment more than two minutes after starting up the test mode (after inserting the AC plug).
- The laser diode may be damaged if the recording power is greater than the specified value. Always perform step 1 before making adjustments and be careful not to exceed the adjustment value by more than 50mV (specified value in step 3).

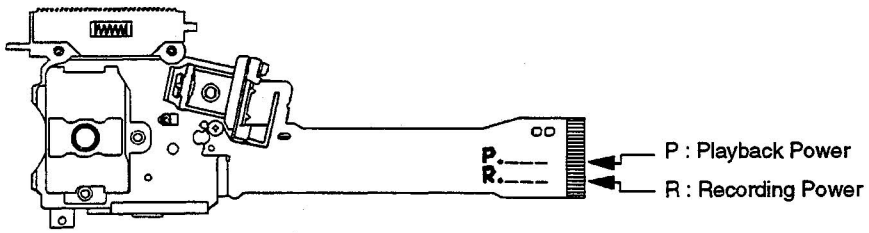

Reference : When adjusting with optical power meter.

(1) Fully turn VR104 (REC. PW) counterclockwise to reduce the power to the minimum.

(2) Move the pickup to the outer edge of the disc with the MANUAL / TRACK SEARCH FWD ►► ►►I key.

(3) Press REC ○ and REC MUTE ● keys in that order to lights up the laser diode.

(4) Shine the light discharged from the objective lens in the pickup on the light power meter sensor and adjust VR104 (REC. PW) so that the recording laser diode output is an average of 4.7mW ± 0.1mW (Wavelength 790nm, Average mode).

Notes:

- Perform this adjustment more than two minutes after starting up the test mode (after inserting the AC plug).
- The laser diode may be damaged if the recording power is greater than the specified value. Always perform step 1 before making adjustments and be careful not to exceed the adjustment value by more than 0.3mW (specified value in step 3).
- Power more than ten times greater than playback power is released during these adjustment. Never look directly at the objective lens.

6.3.19 HF Amp. Gain Adjustment

Adjustment 2

• **Objective**	To correct the discrepancy in the HF level with the pickup.		
• **Symptom when out of adjustment**	Player does not record, track search is impossible.		
• **Measurement instrument connections**	Connect the oscilloscope to CN104 (TP1), Pin 8 (HF). [Settings] 50 mV/div. 500 nS/div. DC mode	• **Player state** • **Adjustment location** • **Disc**	Test mode, play VR119 (HF. GAIN) (HEAD BOARD assy) STD-903

[Procedure]

(1) Move the pickup to midway across the disc (R = 35mm) with the MANUAL / TRACK SEARCH FWD ►► ►►I or REV I◄◄ ◄◄ keys.

(2) Press the FINALIZE key, the PLAY ► key, then the PAUSE ❚❚ key in that order to close the respective servos and put the player into play mode.

(3) Line up bright line (ground) at the center of the oscilloscope screen and put the oscilloscope into DC mode.

(4) Adjust VR119 (HF. GAIN) so that the amplitude of waveform at CN104 (TP1), Pin 8 (HF) is 2.0V ± 0.1V.

Note : Adjust after checking that the DISPLAY OFF KEY LED is OFF.

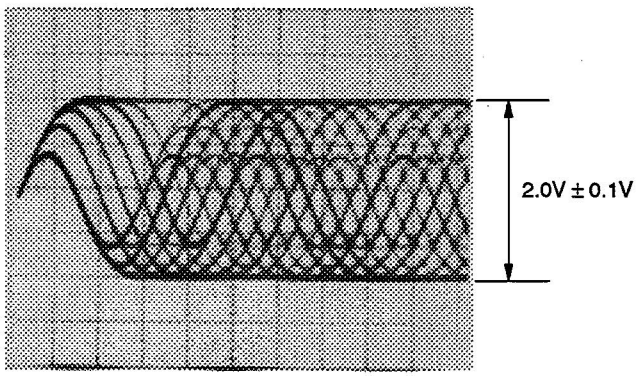

6.3.20 Focus Servo Loop Gain Adjustment

Adjustment 2

• **Objective**	To optimize the focus servo loop gain.		
• **Symptom when out of adjustment**	Playback does not start or focus acutuator noisy.		
• **Measurement instrument connections**	See Fig.6. (SERVO UCOM BOARD assy) [Settings] CH1 : 0.1 V/div. X-Y mode CH2 : 10 mV/div.	• **Player state** • **Adjustment location** • **Disc**	Test mode, play VR201 (FCS. GAIN) (SERVO UCOM BOARD assy) STD-903

[Procedure]

(1) Set the AF generator output to 1.4kHz and 1Vp-p.

(2) Move the pickup to midway across the disc (R = 35mm) with the MANUAL / TRACK SEARCH FWD ►► ►►I or REV I◄◄ ◄◄ keys.

(3) Press the FINALIZE key, the PLAY ► key, then the PAUSE ▮▮ key in that order to close the respective servos and put the player into play mode.

(4) Adjust VR201 (FCS. GAIN) so that the lissajous waveform is symmetrical about X axis and the Y axis.

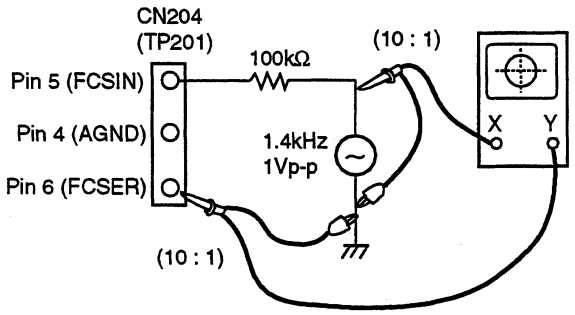

Fig. 6

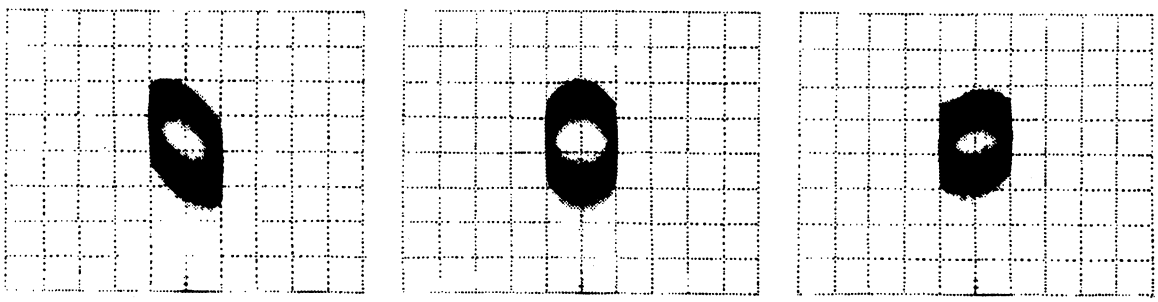

Higher gain | Optimum gain | Lower gain

6.3.21 Tracking Servo Loop Gain Adjustment

Adjustment 2

• **Objective**	To optimize the tracking servo loop gain.		
• **Symptom when out of adjustment**	Playback does not start, during searches the acutuator is noisy, or tracks are skipped.		
• **Measurement instrument connections**	See Fig.7. (SERVO UCOM BOARD assy) [Settings] CH1 : 0.1 V/div. X-Y mode CH2 : 10 mV/div.	• **Player state** • **Adjustment location** • **Disc**	Test mode, play VR202 (TE. GAIN) (SERVO UCOM BOARD assy) STD-903

[Procedure]

(1) Set the AF generator output to 1.2kHz and 2Vp-p.

(2) Move the pickup to midway across the disc (R = 35mm) with the MANUAL / TRACK SEARCH FWD ►► ►►I or REV I◄◄ ◄◄ keys.

(3) Press the FINALIZE key, the PLAY ► key, then the PAUSE ▮▮ key in that order to close the respective servos and put the player into play mode.

(4) Adjust VR202 (TE. GAIN) so that the lissajous waveform is symmetrical about X axis and the Y axis.

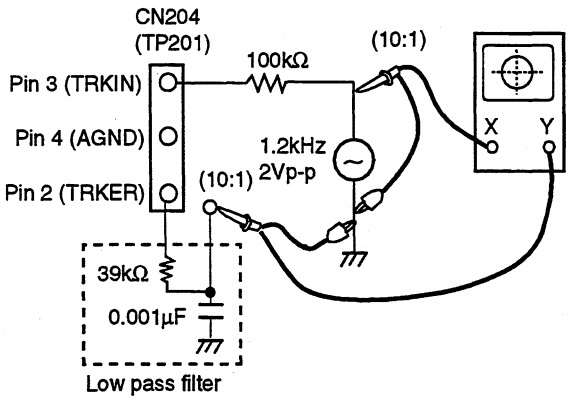

Fig. 7

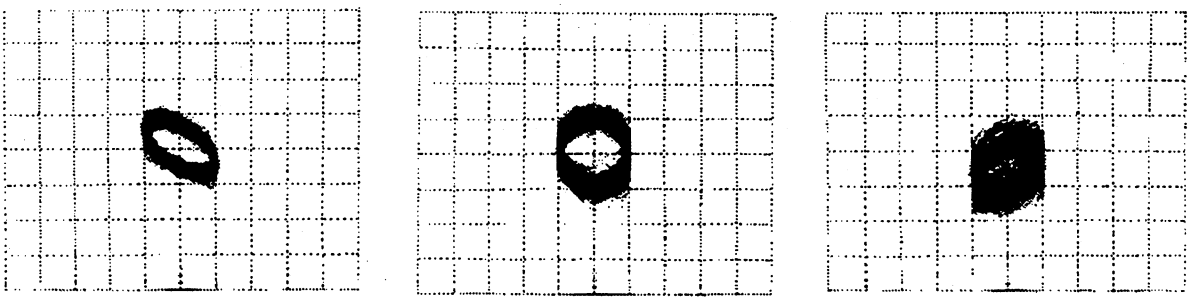

Higher gain | Optimum gain | Lower gain

7. GENERAL INFORMATION

7.1 PARTS

7.1.1 IC

• The information shown in the list is basic information and may not correspond exactly to that shown in schematic diagrams.

■ PD4786A (SERVO UCOM BOARD ASSY : IC356)

Mechanism Control Microcomputer

(1) Pin Function

Pin No.	Mark	Name	I/O	Initial	Function
1	P43/AD3	AD3	I/O	–	Data address line
2	P44/AD4	AD4	I/O	–	
3	P45/AD5	AD5	I/O	–	
4	P46/AD6	AD6	I/O	–	
5	P47/AD7	AD7	I/O	–	
6	P50/A8	A8	O	–	Address line
7	P51/A9	A9	O	–	
8	P52/A10	A10	O	–	
9	P53/A11	A11	O	–	
10	P54/A12	A12	O	–	
11	P55/A13	A13	O	–	
12	NC	GND	–	–	Not used
13	P56/A14	A14	O	–	Address line
14	P57/A15	A15	O	–	
15	Vdd	+5V	–	–	Positive power supply voltage
16	AVss	GND	–	–	A/D converter GND
17	P70/AN0	XOPEN	I	–	OPEN SW. "L" when open is completed
18	P71/AN1	XCLMP	I	–	CLAMP SW. "L" when clamp DOWN
19	NC	GND	–	–	Not used
20	P72/AN2	GND	I	–	
21	P73/AN3	GND	I	–	
22	P74/AN4	TEPP	I (A)	–	Tracking error peak to peak (For trracking gain adjustment)
23	P75/AN5	RFT	I (A)	–	Playback RF upper envelope
24	P76/AN6	RFB	I (A)	–	Playback RF lower envelope
25	P77/AN7	MACK	I	–	"L" when opposite mode controller serial handshake is input
26	AVref	+5V	–	–	A/D converter reference voltage input
27	AVdd	+5V	–	–	A/D converter analog power supply
28	Vdd	+5V	–	–	Positive power supply pin
29	P20/NM1	XPFAIL	I	–	"L" when power failure is detected. ↓ detection
30	P21/INTP0	FG	I	–	Spindle FG ↓ detection
31	P22/INTP1	SCOR	I	–	EFM decoder frame sync ↓ detection
32	P23/INTP2	ATIP	I	–	ATIP sync ↑ ↓ detection
33	P24/INTP3	ESYN	I	–	EFM encoder frame sync ↓ detection
34	P25/INTP4	XRFDT	I	–	"L" when EFM playback RF detected. ↓ detection
35	P26/INTP5	TOCP	I	–	TOC position sensor (For slider stop processing at TOC position (=L))
36	P27/INTP3/TI	SENS	I	–	SONY servo IC SENS signal (For details, refer to 7. Timing Chart.)
37	NC	GND	–	–	Not used
38	P30/TxD	FOK	I	–	Focus OK input ("H" when Focus OK)
39	P31/RxD	XECE	O	H	"L" when test tool reading enable is output
40	P32/SO/SBO	MSO	O	L	Clock sync serial transformer data output

Note) "A" in the I/O column indicates analog.

Pin No.	Mark	Name	I/O	Initial	Function
41	P33/SI/SBI	MSI	I	L	Clock sync serial transfer data input
42	P34/SCK‾	MSCK	O	H	Clock sync serial transfer clock output
43	NC	GND	–	–	Not used
44	P80/T000	XFUSE	I	H	"L" when communication between LC89585 ⇔ Mode contoroller
45	P81/T001	GFS	I	–	GFS input ("H" when GFS OK)
46	P82/T002	ECLV	O	H	Spindle servo EFM/Wobble CLV mode
47	P83/T003	CLV	O	H	Spindle servo CLV/CAV mode
48	P84/T010	SPSQ	O	–	Spindle drive PWM output during spindle CAV
49	P85/T001	MREQ	O	H	"L" when opposite mode controller serial handshake is output
50	RESET‾	XRST	I	–	"L" when reset input
51	X1	CLOCK	I	–	System clock oscillation crystal connection pin
52	X2	CLOCK	–	–	Input to X1 pin when clock is supplied from outside
53	NC	GND	–	–	Not used
54	Vss	GND	–	–	GND pin
55	WDTO‾	NC	O	L	Not used
56	P00/RTP0	XSUBQE	O	H	"L" when EFM decoder sub code Q reading is enabled
57	NC	GND	–	–	Not used
58	P01/RTP1	XENCE	O	L	"H" when LC89585 serial enable is output
59	P02/RTP2	XASYN	O	L	ATIP frame sync "L"
60	P03/RTP3	XEXSC	O	H	"L" when LC89585 external sync enable is output
61	P04/RTP4	SSO	O	L	SONY servo IC command special serial data output
62	P05/RTP5	SSCK	O	H	SONY servo IC command special serial clock output
63	P06/RTP6	XLT	O	H	"L" when SONY servo IC command is latched
64	P07/RTP7	RECE	O	L	"H" when laser diode recording power is on
65	EA‾/Vpp	EA‾	I	–	Used as internal ROM mode when connected to +5V
66	Vss	GND	–	–	GND pin
67	P93/TMD	RAME	O	H	"H" when external SRAM is enable
68	P92/TAS‾	XSVRST	O	L	"L" when servo system IC mode control reset is output
69	P91/WR‾	XWR	O	L	Strobe signal output for external memory write operations
70	P90/RD‾	XRD	O	L	Strobe signal output for external memory read operations
71	ASTB	ASTB	O	–	Signal which latches lower address signal for external memory access externally
72	P40/ADD	AD0	I/O	–	Data address line
73	P41/AD1	AD1	I/O	–	
74	P42/AD2	AD2	I/O	–	

(2) "External Port"-output from PDJ006A (SERVO UCOM BOARD ASSY : IC207) (External RAM area (8000H to 8FFFH)

Pin No.	Mark	Name	I/O	Initial	Function
45	POA0	LDPW0	O	L	LSB — 5 bit (D/A out) recording laser power output setting
46	POA1	LDPW1	O	L	
47	POA2	LDPW2	O	L	
49	POA3	LDPW3	O	L	
50	POA4	LDPW4	O	L	MSB
51	POA5	SSEL	O	L	"L" when tracking error envelope detection is reset
52	POA6	—	O	L	Not used
53	POA7	LJUMP	O	L	"H" during N track jump
54	POB0	LIN	O	L	"H" during loading close
55	POB1	LOUT	O	L	"H" during loading open
56	POB2	KOJK	O	L	Optical axis switching circuit ON/OFF
57	POB3	EECS	O	L	EEPROM data writing and reading enable output
59	POB4	—	O	L	Not used
60	POB5	FC_OST	O	L	Focus offset switching output. During search: L. Other than search: H
61	POB6	STCN1	O	L	Strategy control output 1
62	POB7	STCN2	O	L	Strategy control output 2
63	POC0	TEG0	O	L	LSB — Tracking error amplifier gain adjustment
64	POC1	TEG1	O	L	
65	POC2	TEG2	O	L	
66	POC3	TEGM	O	L	MSB
67	POC4	DIRC	O	H	"L" when SONY servo IC DIRC is output
69	POC5	XCDMIR	O	H	Mirror detection circuit selection SW CD_ R/$\overline{\text{CD}}$
70	POC6	XLDON	O	H	Laser diode OFF/$\overline{\text{ON}}$
71	POC7	AMUTE	O	H	Audio final stage mute H (According to mode controller instructions) Turns mute ON during REC PAUSE, when input selector is switched, and during STOP

PDR-04 switches the record EFM in accordance with the characteristic of CD-R disc.
Pulse has four varieties (strategy) which is controlled by strategy control output 1 and 2 (STCN1, STCN2).

Logical setting table of STCN1 and STCN2

STCN1	STCN2	Strategy Type
0	0	EFM1
0	1	EFM2
1	0	EFM3
1	1	EFM4

Note) In the Test mode, "EFM2" is selected only.

(3) Peripheral Block Diagram (Servo Section)

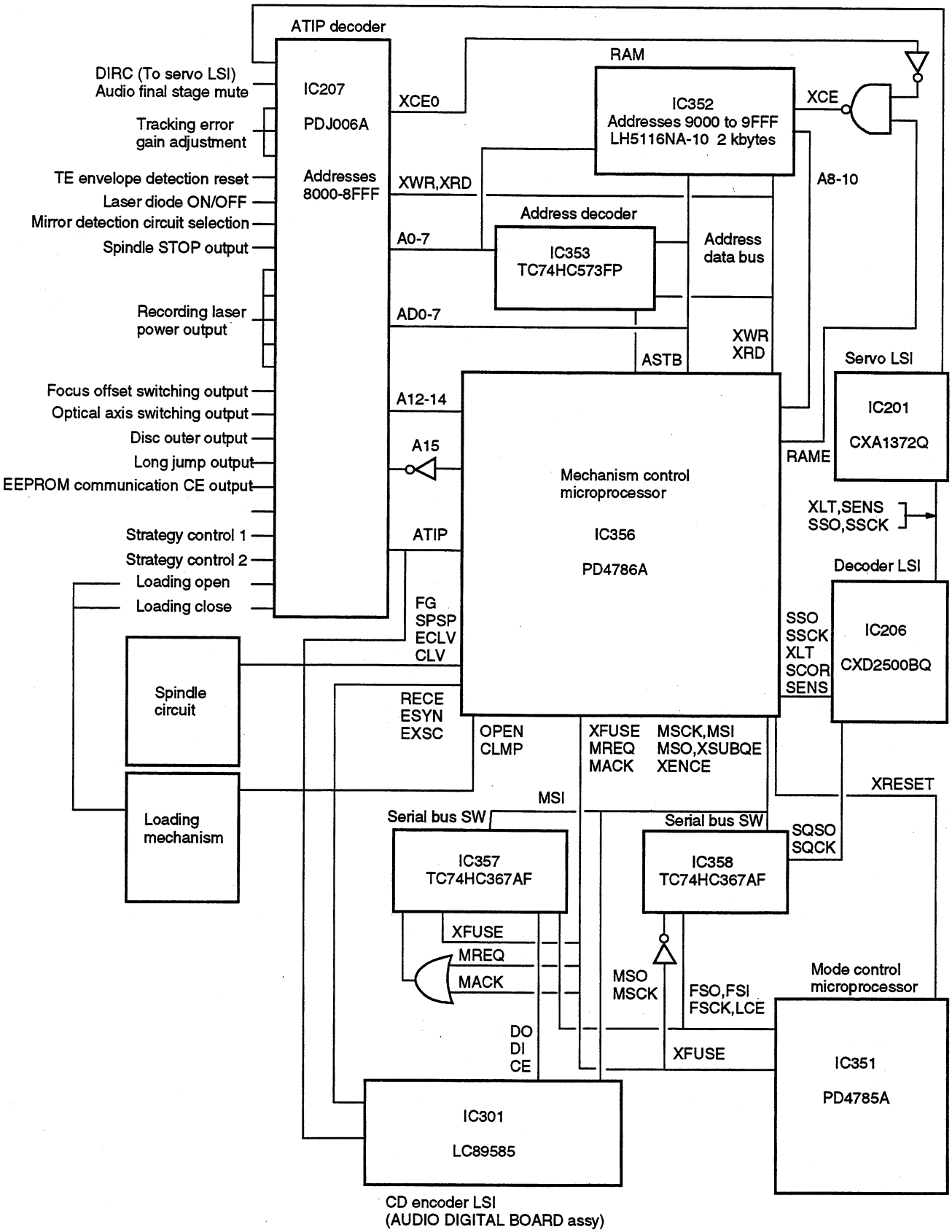

(4) Operating Flow Chart (1)

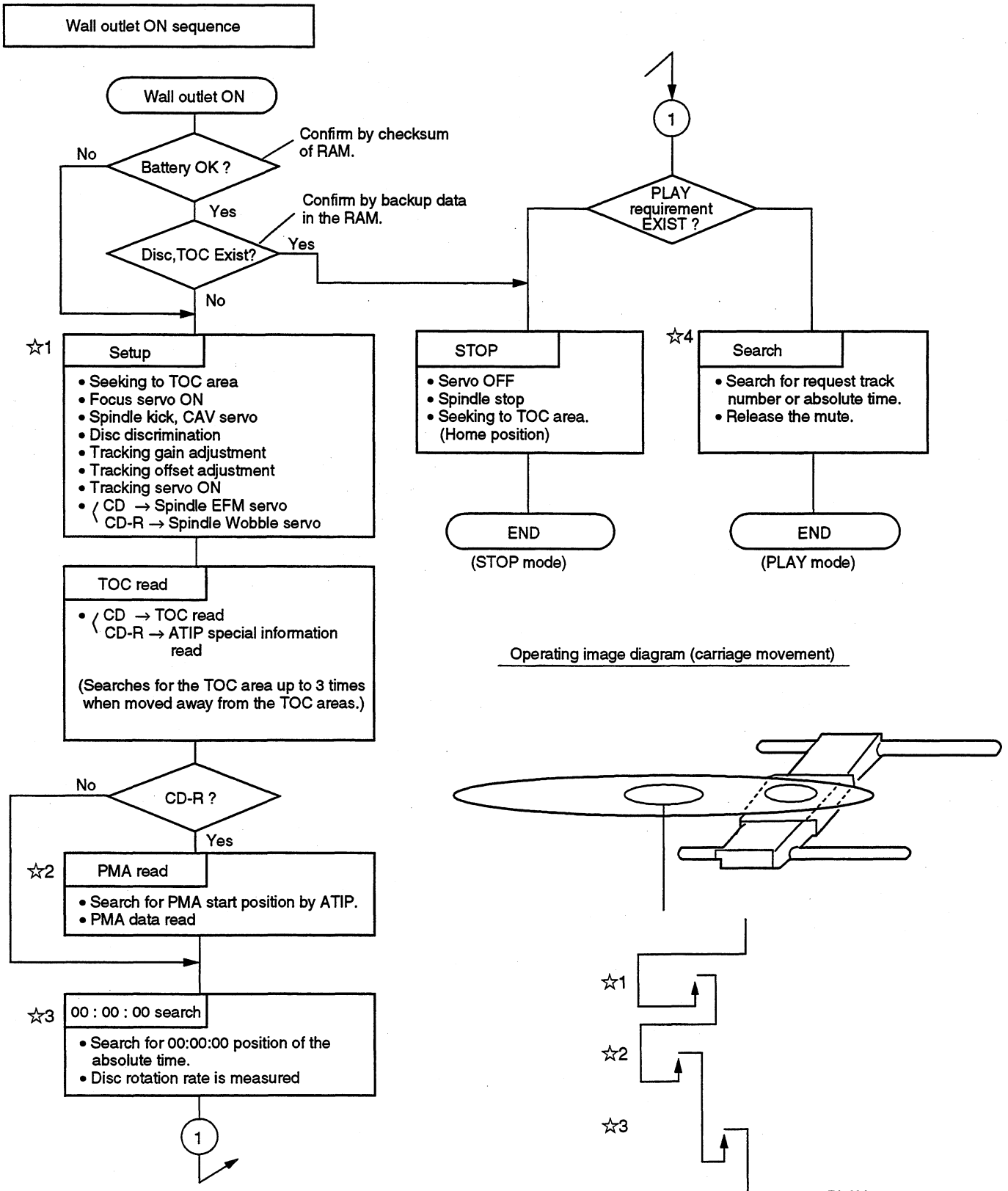

(5) Operating Flow Chart (2)

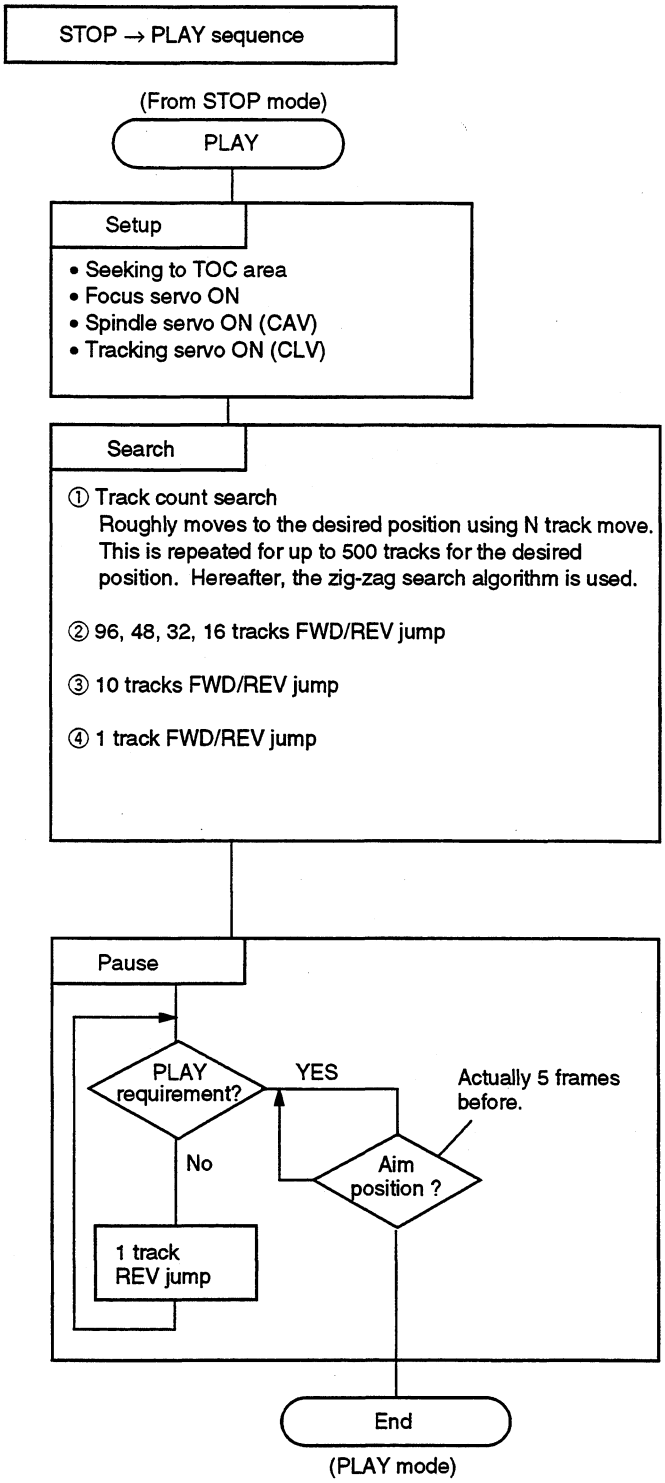

Operating image diagram

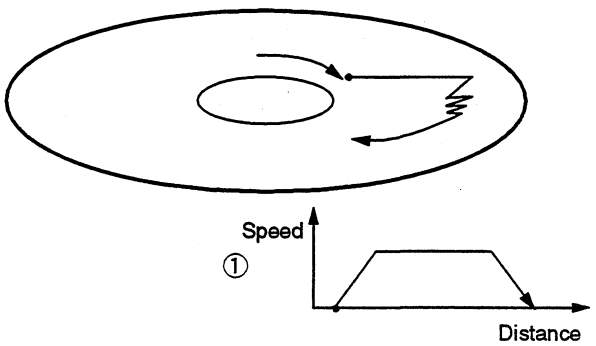

Tracking error waveforms

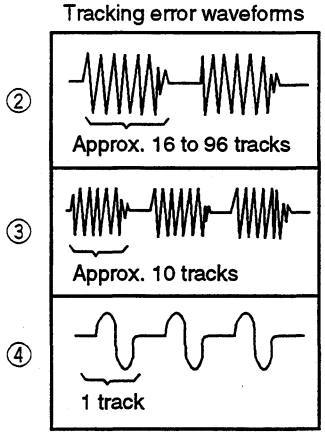

(6) Operating Flow Chart (3)

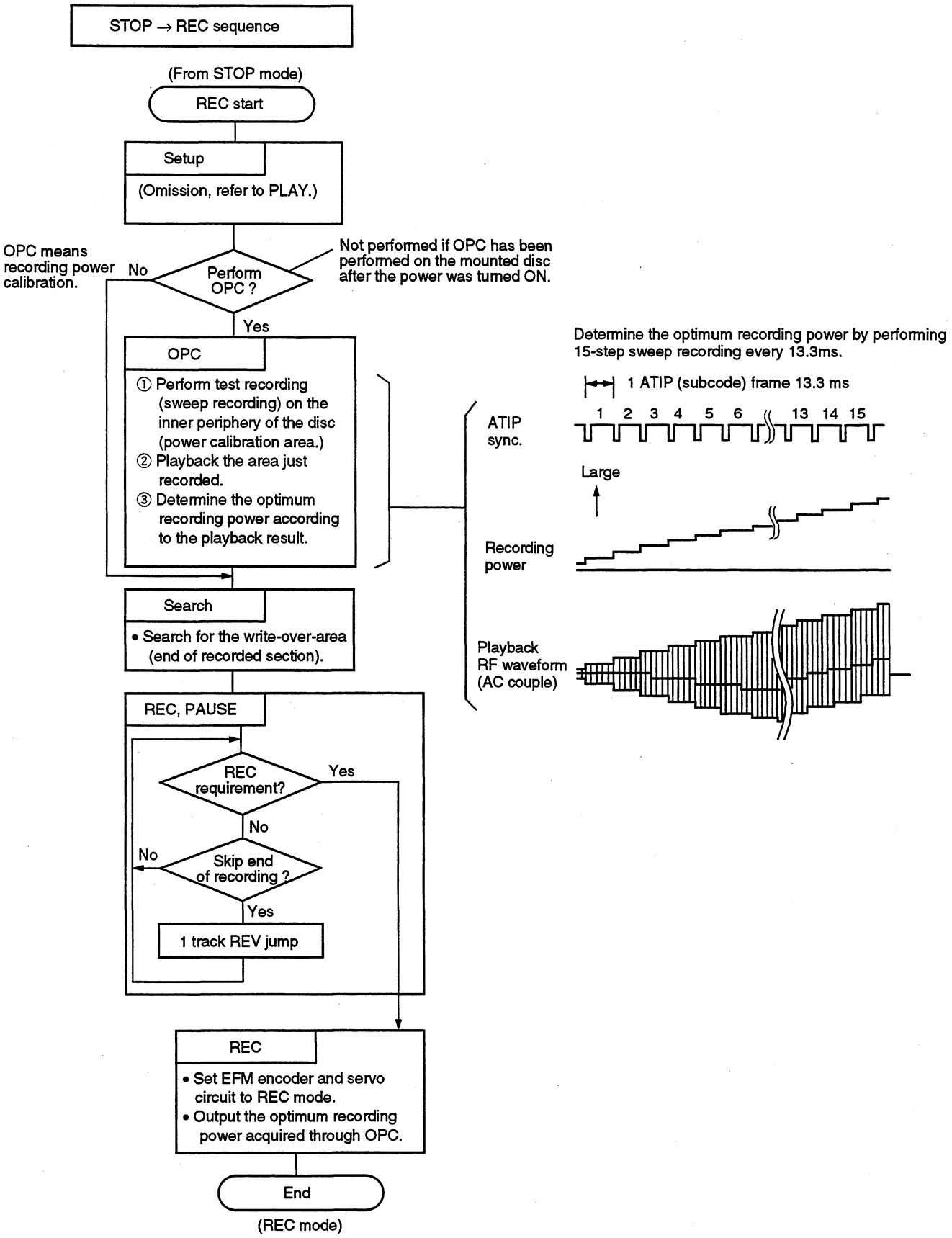

(7) Operating Flow Chart (4)

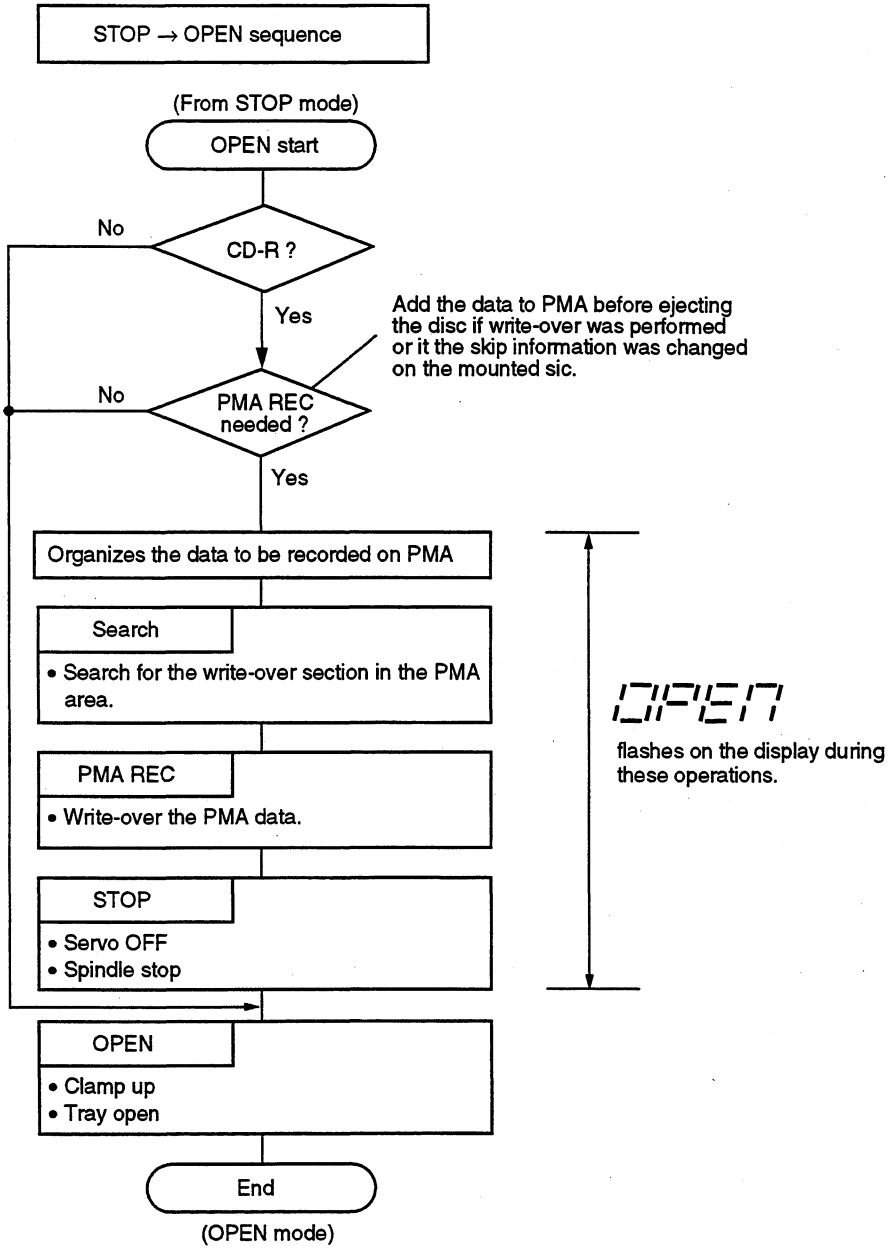

(8) Timing Chart

① Timing Chart when Power ON (Outlet ON)

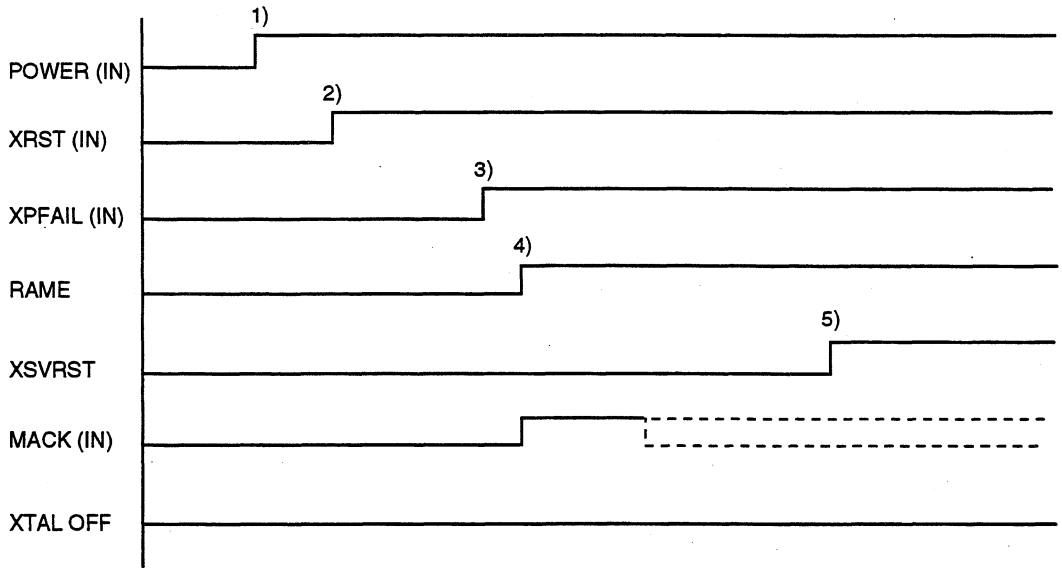

1) Power turns on.
2) XRST becomes H and reset is turned off.
3) After reset is turned off, wait for XPFAIL to become H.
4) After XPFAIL becomes H, the microprocessor starts.
   RAME becomes H, and the external SRAM is set to the enable state.
5) XSVRST becomes H, and servo circuit operations start.

② Timing Chart when Power Failure

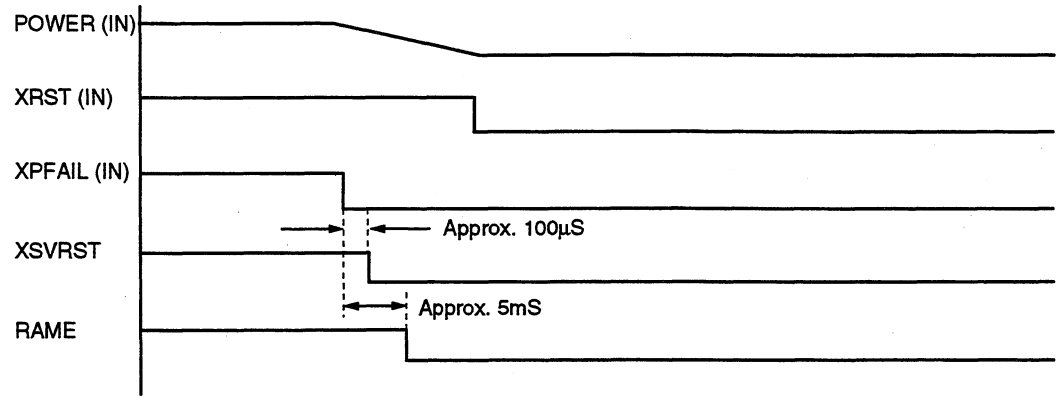

1) The power starts dropping and after a certain point, XPFAIL becomes L.
2) When XPFAIL becomes L, an internal interrupt is imposed, and the current operation mode and disc data are backed up.
3) At the same time, XSVRST becomes L, servo is reset, RAME is set to L, and the external SRAM is set to the disable state.
4) XRST then becomes L, and reset is set.

Note : If XRST becomes L first before RAME becomes L, the value of the backup RAM (IC352) will not be stored properly.

③ Seek Track 0

Carriage is moved to TOC area (Home position).

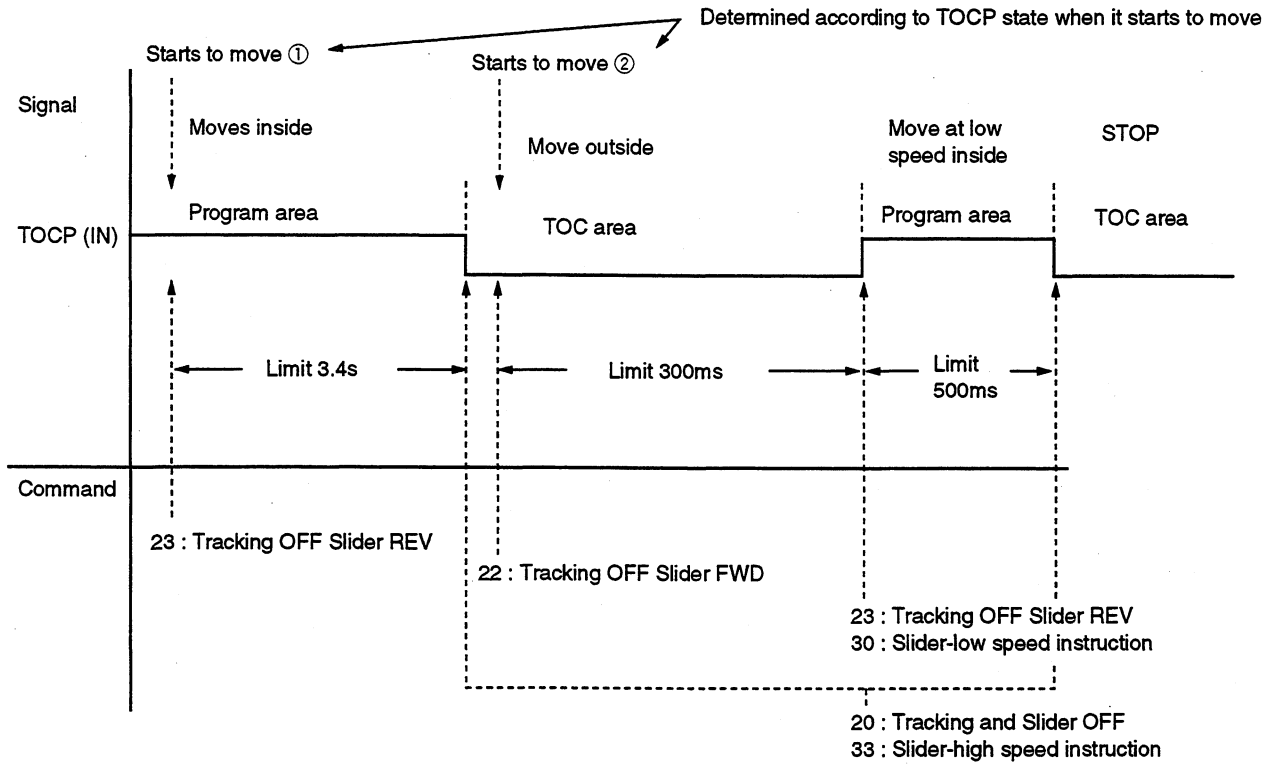

④ Focus ON

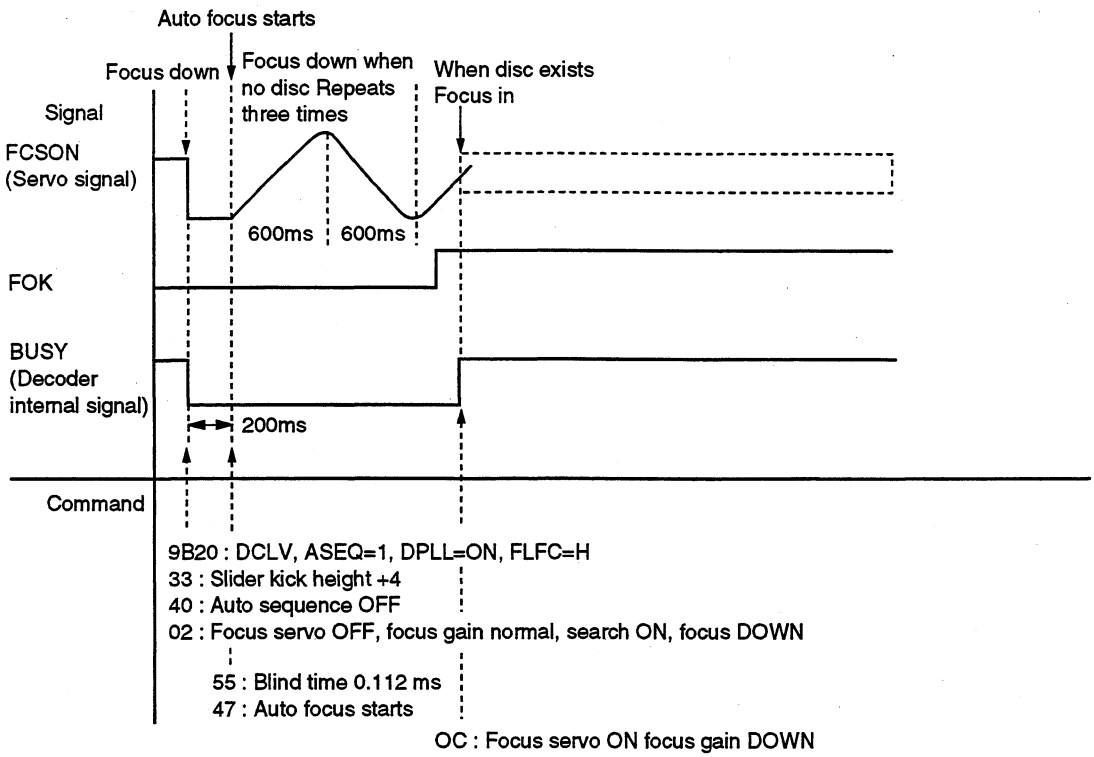

(9) Tracking Error Gain Adjustment Flow Chart

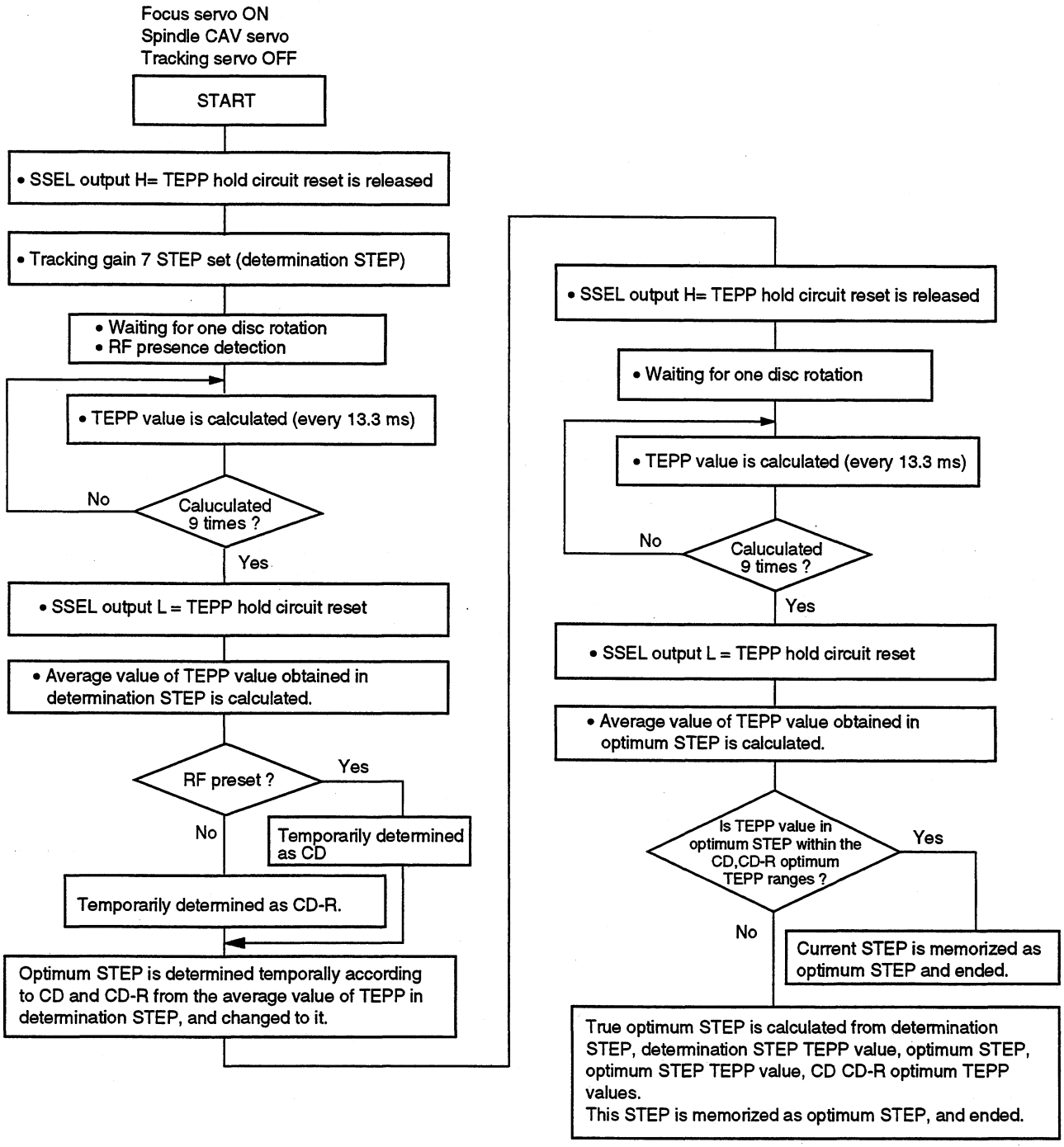

Reference :True optimum STEP =

$$= \frac{\text{Determination STEP} - \text{Optimum STEP}}{\text{TEPP value of determination STEP} - \text{Optimum STEP TEPP value}} \text{(CD, CD-R optimum TEPP value} - \text{optimum STEP TEPP value)} + \text{Optimum STEP}$$

(10) Tracking Gain Adjustment Timing Chart

Optimum TEPP value : 2.494V ± 0.103V (2.372 to 2.649V)

1) Example of increasing gain to maximum after disc gain became low

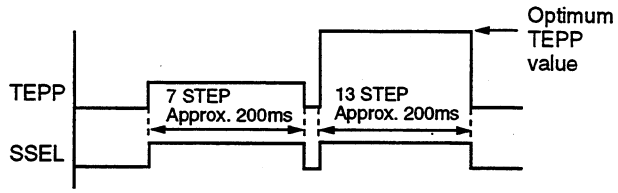

2) Example of increasing gain after disc gain became low

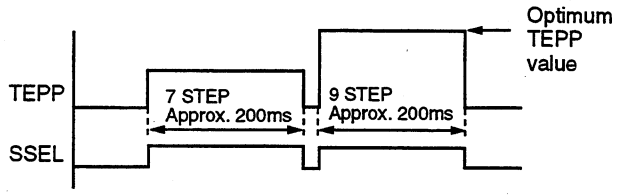

3) Example of decreasing gain to minimum after disc gain became high

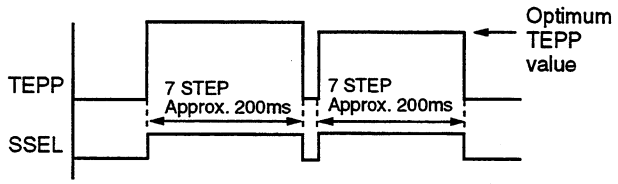

(11) Loading Control for Turn Table

Open/Close control and SW states
The following shows the chart of the loading-related input/output pins.

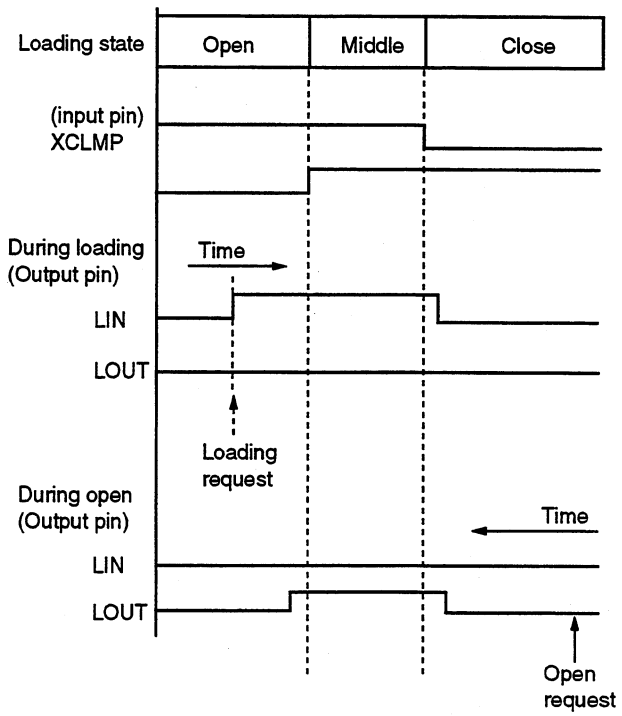

(12) Spindle Servo Mode Selection During CD-R, STOP → PLAY → Search → Operations

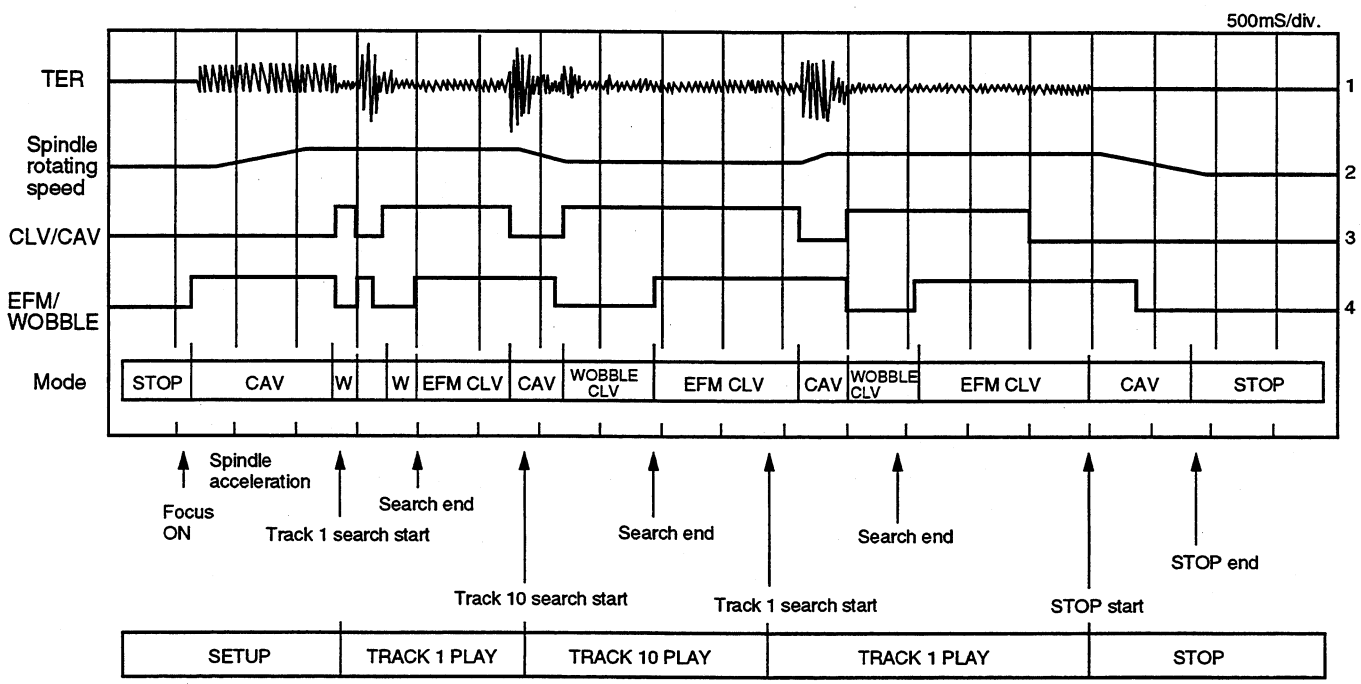

■ PD4785A (SERVO UCOM BOARD ASSY : IC351)

Mode Control Microcomputer

(1) Pin Function

Pin No.	Mark	Name	I/O	Initial	Function
1	FIP6	GRID 6	O	L	FL grid output 5
2	FIP5	GRID 5	O	L	FL grid output 6
3	FIP4	GRID 4	O	L	FL grid output 7
4	FIP3	GRID 3	O	L	FL grid output 8
5	FIP2	GRID 2	O	L	FL grid output 9
6	FIP1	GRID 1	O	L	FL grid output 10
7	FIP0	GRID 0	O	L	FL grid output 11
8	VDD	VDD	O	L	Connected to VDD
9	SCK0	RSCK	O	H	Serial clock for JIG communication
10	SO0	RSO	O	L	Serial output for JIG communication
11	SI0	RSI	I	U	Serial input for JIG communicatiion
12	P24	XTAL	O	L	XTAL ON/OFF (L : No FS model and at digital selection only)
13	P23	XEVCO	O	L	Encoder VCO ON/OFF (at CD = H)
14	SCK1	FSCK	I/O	H	Mechanism controller, LSI serial clock
15	SO1	FSO	O	L	Mechanism controller, serial output
16	SI	FSI	I	–	Mechanism controller, serial input
17	RESET	XRESET	O	L	Mode controller reset input
18	P74	LED4	O	H	Standby LED (L: ON)
19	P73	LED5	O	H	Display ON/OFF LED (L: ON)
20	AVSS	GND	I	–	Connected to GND
21	P17	XFUSE	O	H	Between mode controller and LC89585 serial communication currently used (L)
22	P16	–	O	L	Not used
23	P15	XVCO	O	H	PLL ON/OFF (No FS model and at digital selection : L (PLL oscillation)
24	P14	XTALOFF	O	L	XTAL ON (L), OFF (H)
25	P13	XEMP	O	H	Emphasis control L: deemphasis
26	P12	XRST	O	L	Mechanism controller, ATIP decoder reset H : Release reset
27	P11	XOPT	O	L	Optical input selection (at optical input selection (DIGITAL1)= L)
28	P10	–	O	L	Not used
29	AVDD	VDD	–	–	Connect to VDD
30	AVREF	VDD	–	–	
31	P04	MODE	I	–	Not used L: Fixed
32	XT2	–	O	–	Not used
33	VSS	GND	–	–	Connected to GND
34	X1	–	I	–	System oscillation 4.19MHz
35	X2	–	O	–	
36	P37	SW1	I	L	Demo mode ON/OFF L: DEMO display
37	P36	DIN_SEL	I	–	Digital input 1/2 selection (H: 2)
38	P35	FS_SW	I	–	FS converter present/absent selection (H: present)
39	P34	TIM_SW	I	–	Timer play selection (H: certainly peform the timer play at power ON)
40	P33	DIP4	O	L	Not used

Note) U: Pull-up, D: Pull-down

Pin No.	Mark	Name	I/O	Initial	Function
41	P32	MACK	O	H	Mechanism controller communication response
42	P31	LREQ	O	H	CE signal for LC89585
43	P30	UNLOCK	I	–	Digital unlock detection
44	INTP3	DIGOUT	I	–	Digital output ON/OFF (H: DIGITAL OUTPUT ON)
45	INTP2	XPFAIL	I	–	Power down detection L: Power down
46	INTP1	MREQ	I	–	Mechanism controller communication request (Interrupt)
47	INTP0	REMIN	I	–	Remote control input (Interrupt)
48	IC	VPP	I	–	Connected to GND
49	P72	LED2	O	L	Not used
50	P71	LED1	O	L	REC indicator LED (L: LED ON)
51	P70	LED0	O	L	Manual track increment enable (L: LED ON)
52	VDD	VDD	–	–	Connected to VDD
53	P127	SCAN4	O	L	Key matrix output 4
54	P126	SCAN3	O	L	Key matrix output 3
55	P125	SCAN2	O	L	Key matrix output 2
56	P124	SCAN1	O	L	Key matrix output 1
57	P123	SCAN0	O	L	Key matrix output 0
58	P122	KEYIN3	I	–	Key matrix input 3
59	P121	KEYIN2	I	–	Key matrix input 2
60	P120	KEYIN1	I	–	Key matrix input 1
61	P117	KEYIN0	I	–	Key matrix input 0 (Including test SW)
62	P116	–	O	L	Not used
63	P115	AATLAT	O	H	Communication latch output for analog input ATT IC (L: during used)
64	P114	–	O	L	XAUTE output L: MUTE ON
65	P113	SEG 10	O	L	FL segment output 10
66	P112	SEG 9	O	L	FL segment output 9
67	P111	SEG 8	O	L	FL segment output 8
68	P110	SEG 7	O	L	FL segment output 7
69	P107	SEG 6	O	L	FL segment output 6
70	P106	SEG 5	O	L	FL segment output 5
71	VLOAD	VLOAD	–	–	VLOAD
72	P105	SEG 4	O	L	FL segment output 4
73	P104	SEG 3	O	L	FL segment output 3
74	P103	SEG 2	O	L	FL segment output 2
75	P102	SEG 1	O	L	FL segment output 1
76	P101	SEG 0	O	L	FL segment output 0
77	P100	GRID 10	O	L	FL grid output 10
78	FIP9	GRID 9	O	L	FL grid output 9
79	FIP8	GRID 8	O	L	FL grid output 8
80	FIP7	GRID 7	O	L	FL grid output 7

(2) System serial communication

The mode controller performed serial communication between the mechanism controller and LC89585 (digital interface LSI) and PDC020A (FS converter LSI).

The mechanism controller also performed communication with LC89585 at the following timings.

① Communication request from mechanism controller.
② Mechanism/mode controller communication
③ Communication with mode controller/LC89585
During this time, XFUSE is set to L and serial communication of mechanism controller is disabled.
④ Serial communication with mode controller/LM1972M
⑤ Communication with mechanism controller/LC89585

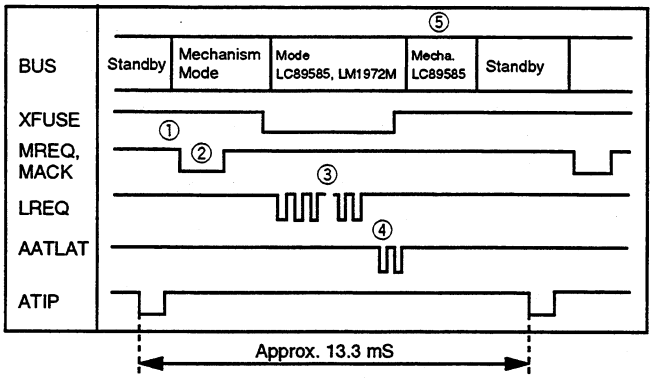

(3) Communication with Mechanism Controller and Mode Controller

Communication Format

This CPU and the mechanism control CPU performed serial communication with 5 signal lines.

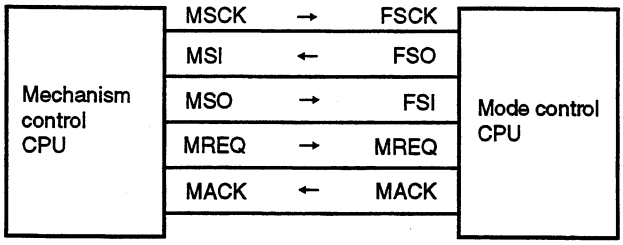

- FSCK ..... Serial transmission clock (1 MHz)
- FSI/FS0 ..... Serial data transmission line
- MREQ/MACK ..... Handshake line

The communication timing is control by the mechanism control CPU. 13 byte data is transmitted every 13.33 to 40 ms. (Average:13.33 msec)

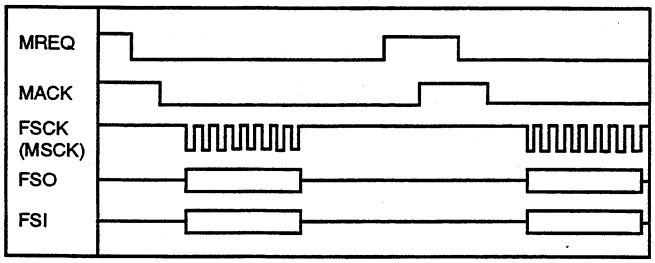

Communication is performed by the following procedure.

① The MREQ signal becomes L as communication request from the mechanism control microprocessor.
② This microprocessor sets the MACK signal to L as communication enable signal.
③ The mechanism controller sets the MREQ signal to H after 1 byte serial transmission.
④ This microprocessor sets MACK to H if serial transmission has ended normally.
⑤ Hereafter ① to ④ are repeated until the 13 byte data transmission has completed.
※ The mechanism controller and mode controller observes the state of the other side's control line, and stops communication processing of transmission if conditions are not satisfied after a certain time.

(4) Communication with digital interface LSI (LC89585, IC301)

Communication format

Communication with the digital interface LSI is performed using four lines.

XFUSE is set to L during communication so that there are no clashes with the mechanism controller.

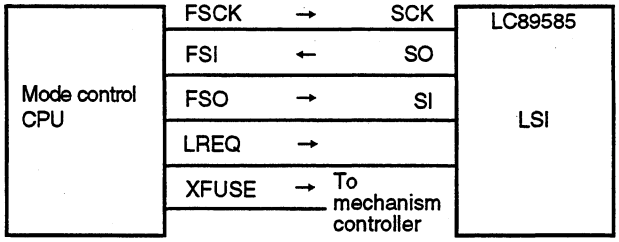

- FSCK ..... Serial transmission clock (1 MHz)
- FSI/FSO .. Serial data transmission line
- BLREQ ... Data enable
- XFUSE.... L when the mode controller is using the communication line

Communication is performed in one main routine.

The communication timing is controlled by the mode controller.

No transmission is performed during communication between the mechanism controller and LC89585.

(Command control)

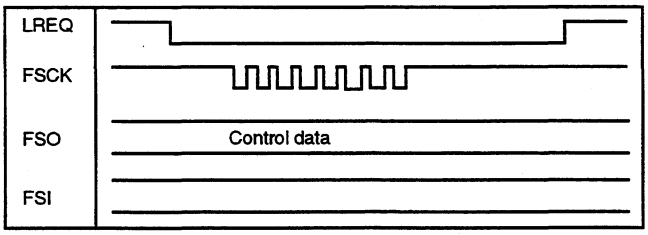

(Data reading)

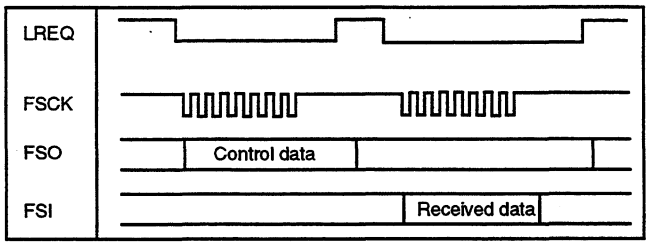

(5) Communication with Analog Input ATT LSI (LM1972M)

Confirm that the communication is performed by the following procedure.

- FSCK ..... Serial transmission clock (1 MHz)
- FSI/FSO .. Serial data transmission line
- AATLAT Data enable

When analog ATT data is changed, communication is performed in twice in one main routine.

The communication timing is controlled by the mode controller.

(Command control)

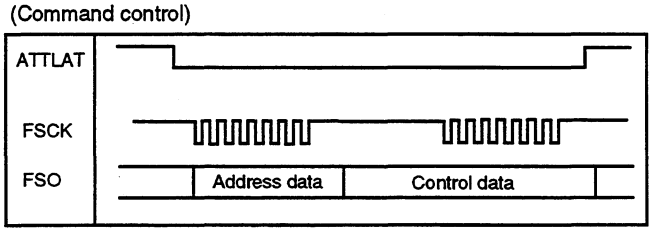

■ LM1972M (ALC BOARD ASSY : IC2001)

2-CHANNEL 78dB AUDIO ATTENUATOR WITH MUTE

• **Pin Arrangement (Top view)**

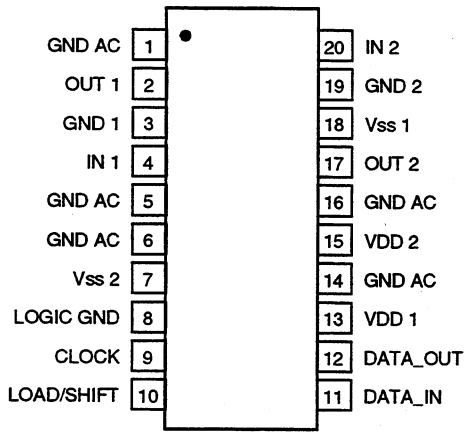

• **Pin Function**

Pin No.	Pin Name	Function
1	GND AC	Ground
2	OUT1	Signal output (L ch)
3	GND1	Signal ground
4	IN1	Signal input (L ch)
5	GND AC	Ground
6	GND AC	Ground
7	VSS2	– 5V power supply
8	LOGIC GND	Logic ground
9	CLOCK	Signal clock
10	LOAD/SHIFT	Load/Shift input
11	DATA-IN	Data input
12	DATA-OUT	Data output
13	VDD1	Power supply
14	GND AC	Ground
15	VDD2	+5V power supply
16	GND AC	Ground
17	OUT2	Signal output (R ch)
18	VSS1	Power supply
19	GND2	Signal ground
20	IN2	Signal input (R ch)

■ LC89585 (AUDIO DIGITAL BOARD ASSY : IC301)

EFM ENCODER

• **Block Diagram**

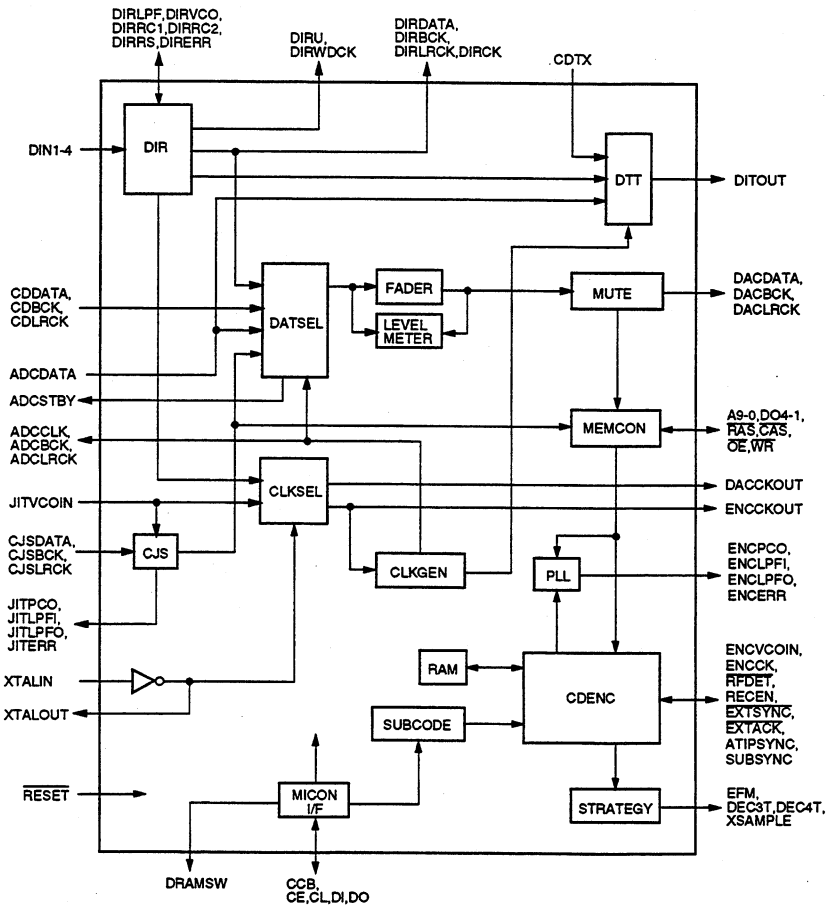

• **Pin Function**

Pin No.	Name	I/O	Function
1	DIN 1	I	Optical module responding data input pin
2	DIN 2	I	Optical module responding data input pin
3	DIN 3	I	Optical module responding data input pin
4	DIN 4	I	Optical module responding data input pin
5	DIRRC 1	I	RC oscillation input pin
6	DIRRC 2	O	RC oscillation output pin
7	AVDD	–	Analog power supply pin
8	DIRRS	I	VCO oscillation band adjustment input pin
9	AGND	–	Analog ground pin
10	DIRVCO	I	VCO freerunning oscillation setting input pin
11	DIRLPF	O	PLL low pass filter pin
12	VSS	–	Ground pin
13	VDD	–	+5V power supply pin
14	DIRCK	O	DIR system clock output pin
15	DIRBCK	O	DIR bit clock output pin
16	DIRLRCK	O	DIR LR clock output pin
17	DIRDATA	O	DIR demodulation data output pin
18	DIRWDCK	O	DIR word clock output pin
19	DIRU	O	User bit output pin
20	DIRERR	O	Data error or lock state monitor output pin. H : Unlocked. L : Locked
21	DRAMSW	O	External DRAM capacity setting output pin. H : 4Mbit. L : 1Mbit
22	CJSDATA	I	Clock jitter suppresser data input pin
23	CJSBCK	I	Clock jitter suppresser bit clock input pin
24	CJSLRCK	I	Clock jitter suppresser LR clock input pin
25	JITVCOIN	I	VCO input pin
26	JITLPFO	O	LPF output pin
27	JITLPFI	I	LPF input pin
28	JITPCO	O	Phase comparator output pin
29	JITERR	O	Lock state monitor signal output pin. H : Unlocked. L : Locked
30	DACDATA	O	DAC data output pin
31	DACBCK	O	DAC bit clock output pin
32	DACLRCK	O	DAC LR clock output pin
33	ADCDATA	I	ADC recording data input pin
34	ADCCLK	O	ADC clock output pin
35	ADCBCK	O	ADC bit clock output pin
36	ADCLRCK	O	ADC LR clock output pin
37	ADCSTBY	O	ADC standby signal output pin. H:Operating. L:Standby
38	XTALIN	I	System clock input pin
39	XTALOUT	O	System clock output pin
40	VSS	–	Ground pin

PDR-04

Pin No.	Name	I/O	Function
41	VDD	–	+5V power supply pin
42	DACCKOUT	O	DAC system clock output pin
43	ENCCKOUT	O	CD decoder system clock output pin
44	CDDATA	I	CD decoder data input pin
45	CDBCK	I	CD decoder bit clock input pin
46	CDLRCK	I	CD decoder LR clock input pin
47	CDTX	I	Pin for inputting signal from CD decoder output
48	DITOUT	O	Bi-phase modulation output pin
49	TP6	I	For tests
50	XRESET	I	System reset input pin. L : Reset
51	TP7	I	For tests
52	XCAS	O	DRAM row address strobe signal output pin
53	XOE	O	DRAM output enable signal output pin
54	A8	O	DRAM address output pin
55	A7	O	
56	A6	O	
57	A5	O	
58	A4	O	
59	A3	O	
60	A2	O	
61	VDD	–	+5V power supply pin
62	VSS	–	Ground pin
63	A1	O	DRAM address output pin
64	A0	O	
65	A9	O	
66	XRAS	O	DRAM column address strobe signal output pin
67	XWR	O	DRAM read/write signal output pin
68	DQ2	I/O	DRAM data input/output pin
69	DQ1	I/O	
70	DQ4	I/O	
71	DQ3	I/O	
72	TP0	I	For tests
73	TP1	I	
74	TP2	I	
75	TP3	O	
76	ENCVCOIN	I	Encode circuit clock input pin
77	ENCLPFO	O	LPF output pin
78	ENCLPFI	I	LPF input pin
79	ENCPCO	O	Phase comparator output pin
80	ENCERR	O	Lock state monitor signal output pin. H : Unlocked. L : Locked

Pin No.	Name	I/O	Function
81	TP4	O	For tests
82	TP5	I	
83	XRFDET	I	RF detection signal input pin. H : No RF. L : RF
84	RECEN	I	Recording enable signal input pin. H : Recordable. L : Not recordable
85	TP8	O	Test pin
86	DET4T	O	4T detection signal output pin
87	DET3T	O	3T detection signal output pin
88	EFM	O	EFM signal output pin
89	VDD	–	+5V power supply pin
90	VSS	–	Ground pin
91	ENCCK	O	Encode clock output pin
92	XEXTACK	O	ATIP synchronization notification signal output pin
93	XEXTSYNC	I	ATIP synchronization enable signal input pin
94	ATIPSYNC	I	ATIP sync signal input pin
95	SUBSYNC	O	Subcode sync signal output pin
96	CCB	I	CPU interface method selection signal input pin. H : Sanyo CCB format. L : General serial format
97	CE	I	CPU interface chip enable signal input pin
98	CL	I	CPU interface data transfer clock input pin
99	DI	I	CPU interface data input pin
100	DO	O	CPU interface data output pin

■ TK16124M (AUDIO DIGITAL BOARD ASSY : IC333, IC334, IC340)

DIGITAL DELAY LINE

- **Block Diagram**

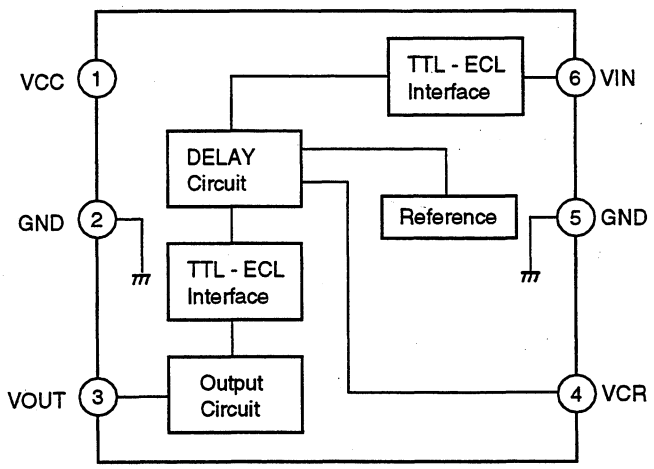

■ AK4321-VF (AUDIO DIGITAL BOARD ASSY : IC401)

D/A CONVERTER IC

• Pin Arrangement (Top view)

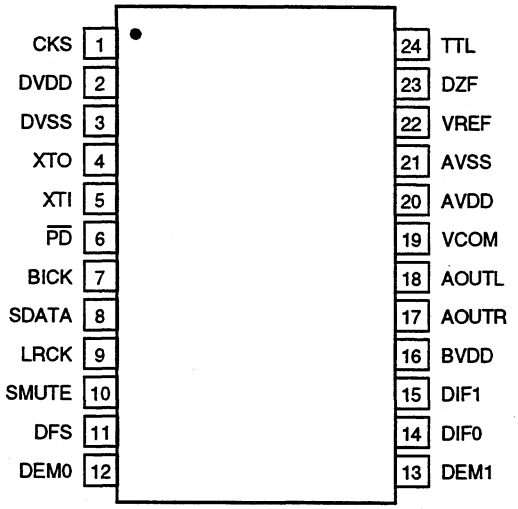

• Block Diagram

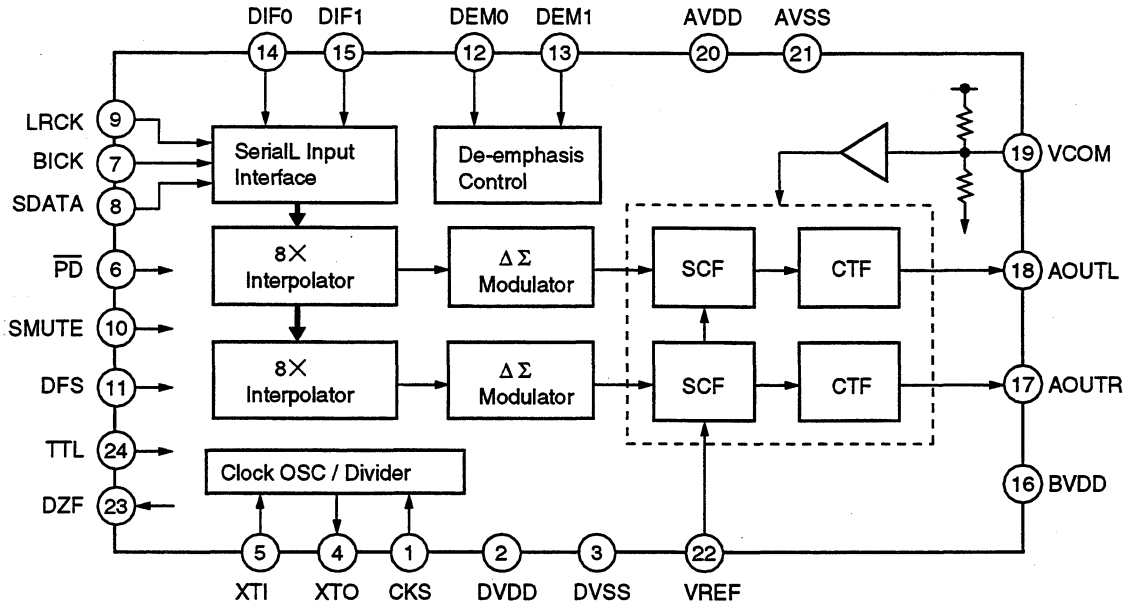

• Pin Function

Pin No.	Pin Name	I/O	Function
1	CKS	I	Clock selection At normal speed ; L : XTI= 256fs, H : XTI= 384fs At double speed ; L : XTI= 128fs , H : XTI= 192fs
2	DVDD	–	Digital power supply
3	DVSS	–	Digital ground
4	XTO	O	Crystal resonator output
5	XTI	I	Clock input
6	PD	I	Power down When this pin is set to L, reset the filter and modulator, and it becomes power down state.
7	BICK	I	Serial bit clock 64fs is recommended.
8	SDATA	I	Serial data input 2's complement, MSB first
9	LRCK	I	L/R clock
10	SMUTE	I	Soft mute H: start the soft mute L: release
11	DFS	I	Double speed sampling mode L: Normal speed H: Double speed
12	DEM0	I	Deemphasis mode It correspond to tri-frequency
13	DEM1	I	
14	DIF0	I	Input format
15	DIF1	I	
16	BVDD	–	Power supply
17	AOUTR	O	R ch analog output
18	AOUTL	O	L ch analog output
19	VCOM	O	Common voltage pin, AVDD/2
20	AVDD	–	Analog power supply
21	AVSS	–	Analog ground
22	VREF	I	Reference voltage input The voltage difference between this pin and AVSS pin decide to full scale of D/A output.
23	DZF	O	Zero Input detection pin When the data is input to SDATA pin which is continuosly zero for 8192 times on both channels, this pin becomes "H".
24	TTL	I	I/F level selection "L" : CMOS level (DVDD= 2.7V to 5.5V) "H" : TTL level (DVDD= 4.5V to 5.5V)

7.1.2 DISPLAY

■ PEL1086 (FUNCTION BOARD ASSY : V701)

- **FL INDICATOR TUBE**

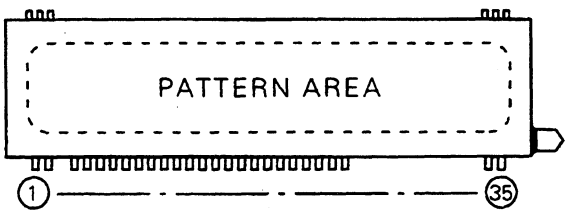

Pin Connection

Pin No.	1	2	3	4	5	6	7	8	9	10	11	12	13	14	15	16	17
Connection	F1	F1	NP	P a	P b	P c	P d	P e	P f	P g	P h	P i	P j	P k	11G	10G	9G

Pin No.	18	19	20	21	22	23	24	25	26	27	28	29	30	31	32	33	34	35
Connection	8G	7G	6G	5G	4G	3G	2G	1G	NP	NP	NP	NP	NP	NP	NP	NP	F2	F2

Notes : 1) F: Filament 2) G: Grid 3) P: Anode 4) NP : No Pin

Grid Assignment

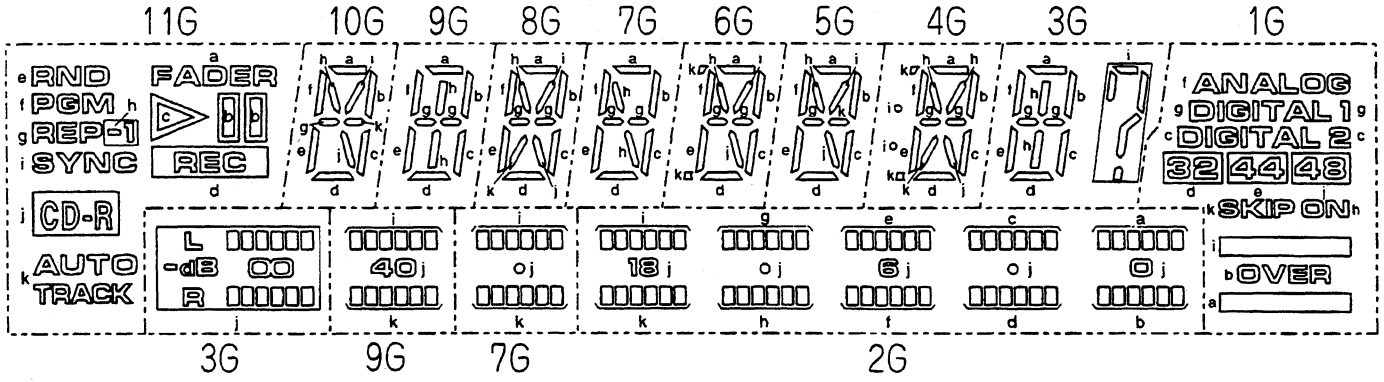

Anode Connection

	11G	10G	9G	8G	7G	6G	5G	4G	3G	2G	1G
a	FADER	a	a	a	a	a	a	a	a	a	
b		b	b	b	b	b	b	b	b	b	OVER
c		c	c	c	c	c	c	c	c	c	DIGITAL 2
d	REC	d	d	d	d	d	d	d	d	d	32
e	RND	e	e	e	e	e	e	e	e	e	44
f	PGM	f	f	f	f	f	f	f	f	f	ANALOG
g	REP	g	g	g	g	g	g	g	g	g	DIGITAL 1
h	-1	h	h	h	h	h	h	h	h	h	ON
i	SYNC	i	i	i	i	i	i	i	i	i	
j	CD-R	j	j	j	j	j	j	j	j	j	48
k	AUTO TRACK		k	k	k	k	k	k		k	SKIP

7.2 DIAGNOSIS

7.2.1 DISASSEMBLY

(1) REMOVE THE TRAY PANEL

Hold the tray panel with your hands as shown in Fig. 1, and grasp the tray with your thumbs and then lift the tray panel up while pulling it toward you with the other fingers. (Fig. 2)

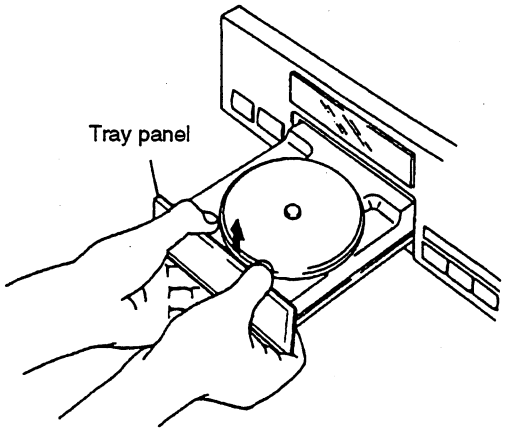

Fig. 1

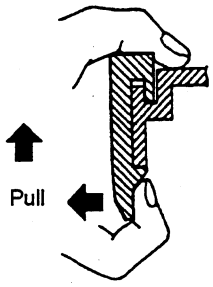

Fig. 2

(2) INSTALL THE TRAY PANEL

Align the tray panel with the grooves located at both edges of the tray. And then press it down till it stops. (Fig. 3)

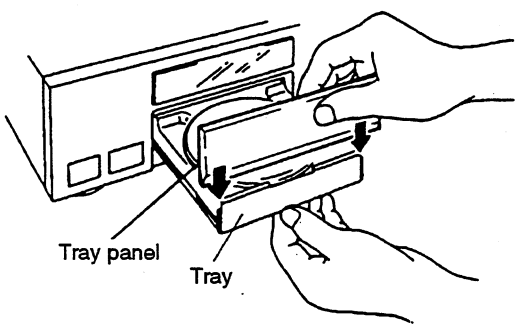

Fig. 3

(3) REMOVE AND SET UP THE HEAD BOARD ASSY

① Remove the bonnet.

② Remove the tray panel (Refer to section 1).

③ Remove the five screws of the front panel.

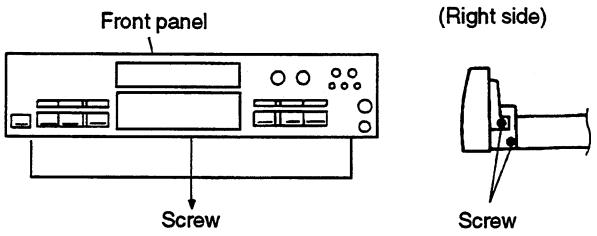

Fig. 4

④ Pull out the right side of the front panel to the front and remove the four screws of the board.

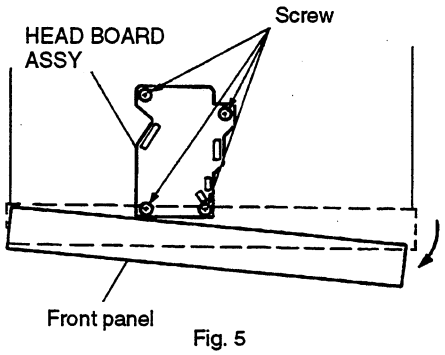

Fig. 5

⑤ Remove the fixtures of the wires connected to the board (cord holder, PCB binder).

⑥ Place the HEAD BOARD ASSY upright against the slit of the float base.

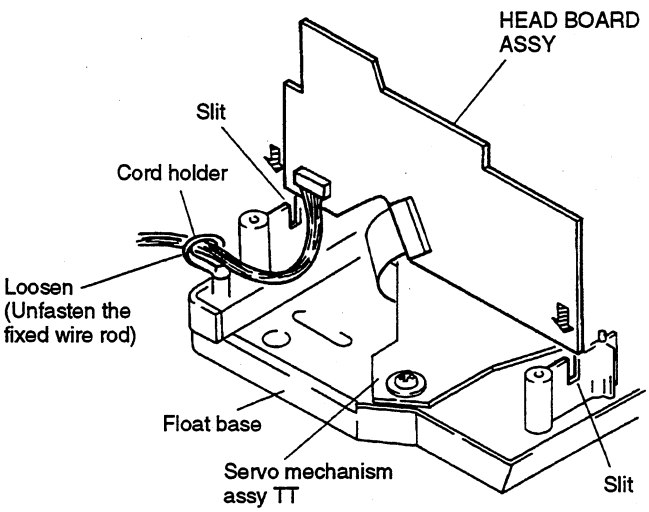

Fig. 6

7.3 EXPLANATION

7.3.1 BLOCK DIAGRAM

(1) SERVO SYSTEM BLOCK

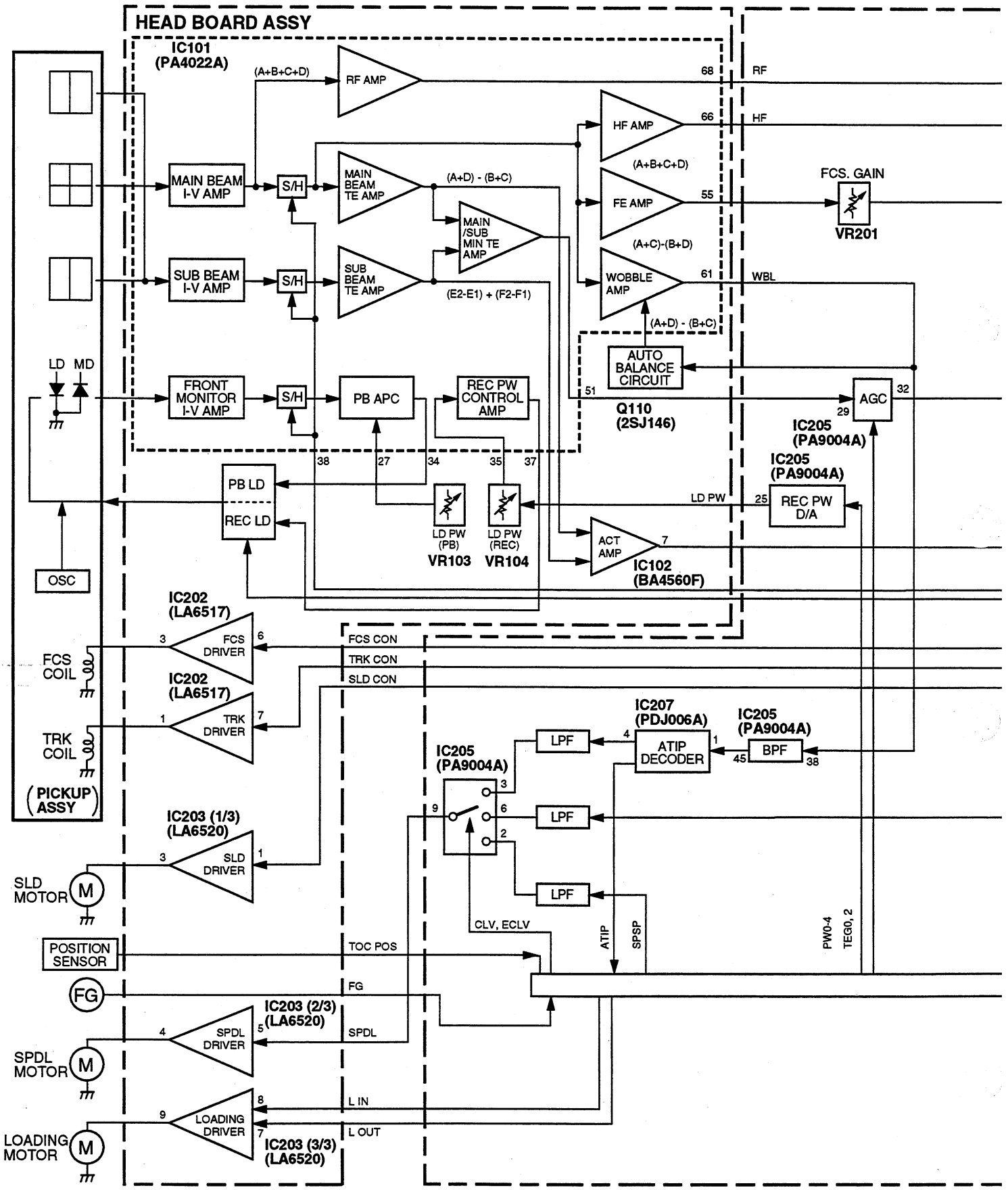

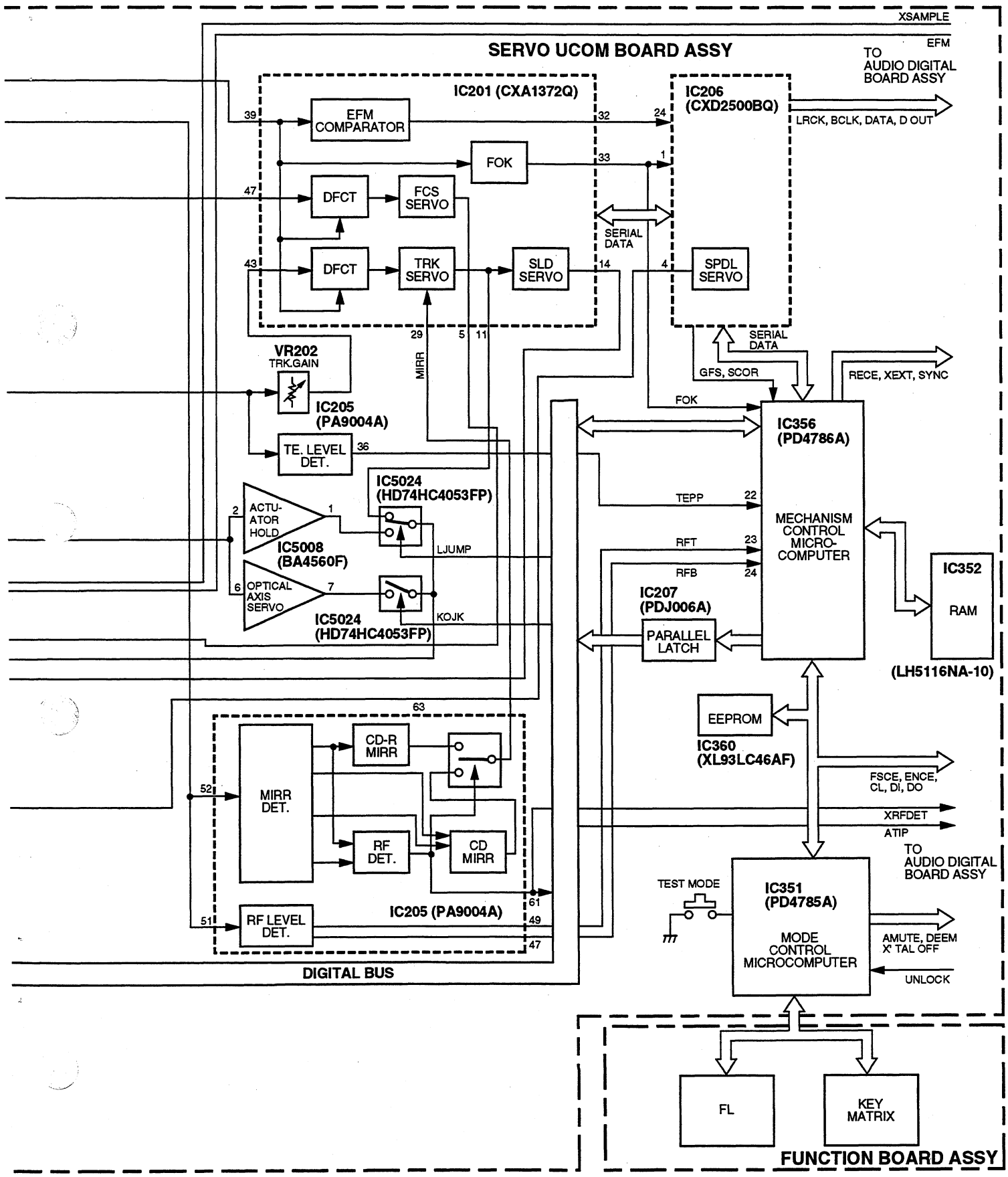
XSAMPLE
SERVO UCOM BOARD ASSY
EFM
TO AUDIO DIGITAL BOARD ASSY
IC201 (CXA1372Q)
IC206 (CXD2500BQ)
LRCK, BCLK, DATA, D OUT
39
EFM COMPARATOR
32
24
FOK
33
1
47
DFCT
FCS SERVO
SERIAL DATA
43
DFCT
TRK SERVO
SLD SERVO
14
4
SPDL SERVO
29
5
11
MIRR
SERIAL DATA
GFS, SCOR
RECE, XEXT, SYNC
VR202
TRK.GAIN
IC205 (PA9004A)
FOK
IC356 (PD4786A)
TE. LEVEL DET.
36
IC5024 (HD74HC4053FP)
TEPP
22
2
ACTU-ATOR HOLD
1
IC5008 (BA4560F)
LJUMP
MECHANISM CONTROL MICRO-COMPUTER
RFT
23
RFB
24
IC352
RAM
(LH5116NA-10)
6
OPTICAL AXIS SERVO
7
IC5024 (HD74HC4053FP)
KOJK
IC207 (PDJ006A)
PARALLEL LATCH
63
EEPROM
IC360 (XL93LC46AF)
CD-R MIRR
52
MIRR DET.
FSCE, ENCE, CL, DI, DO
XRFDET
ATIP
TO AUDIO DIGITAL BOARD ASSY
RF DET.
CD MIRR
TEST MODE
IC351 (PD4785A)
61
IC205 (PA9004A)
51
RF LEVEL DET.
49
47
AMUTE, DEEM X' TAL OFF
MODE CONTROL MICROCOMPUTER
UNLOCK
DIGITAL BUS
FL
KEY MATRIX
FUNCTION BOARD ASSY

(2) AUDIO SYSTEM BLOCK

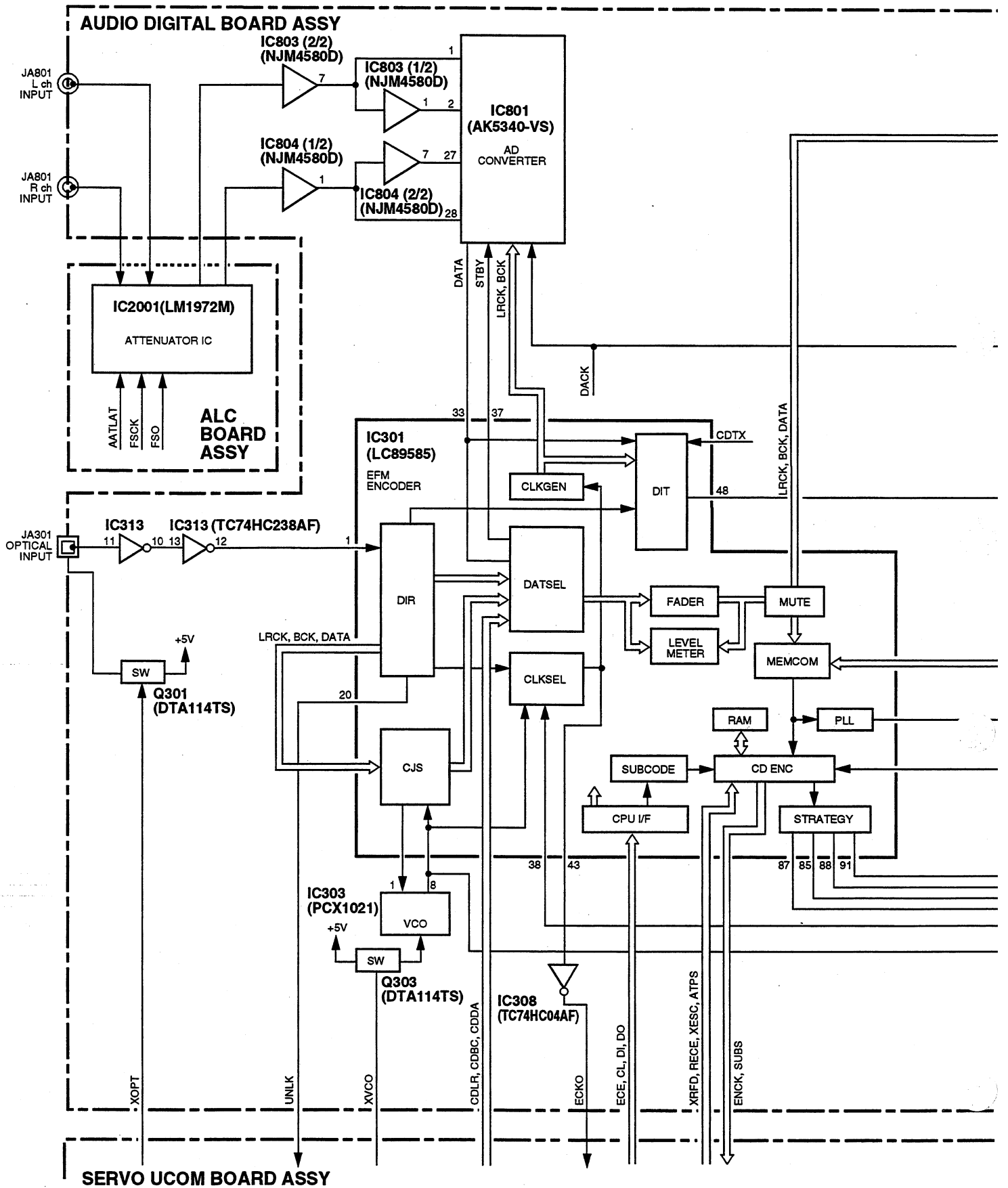

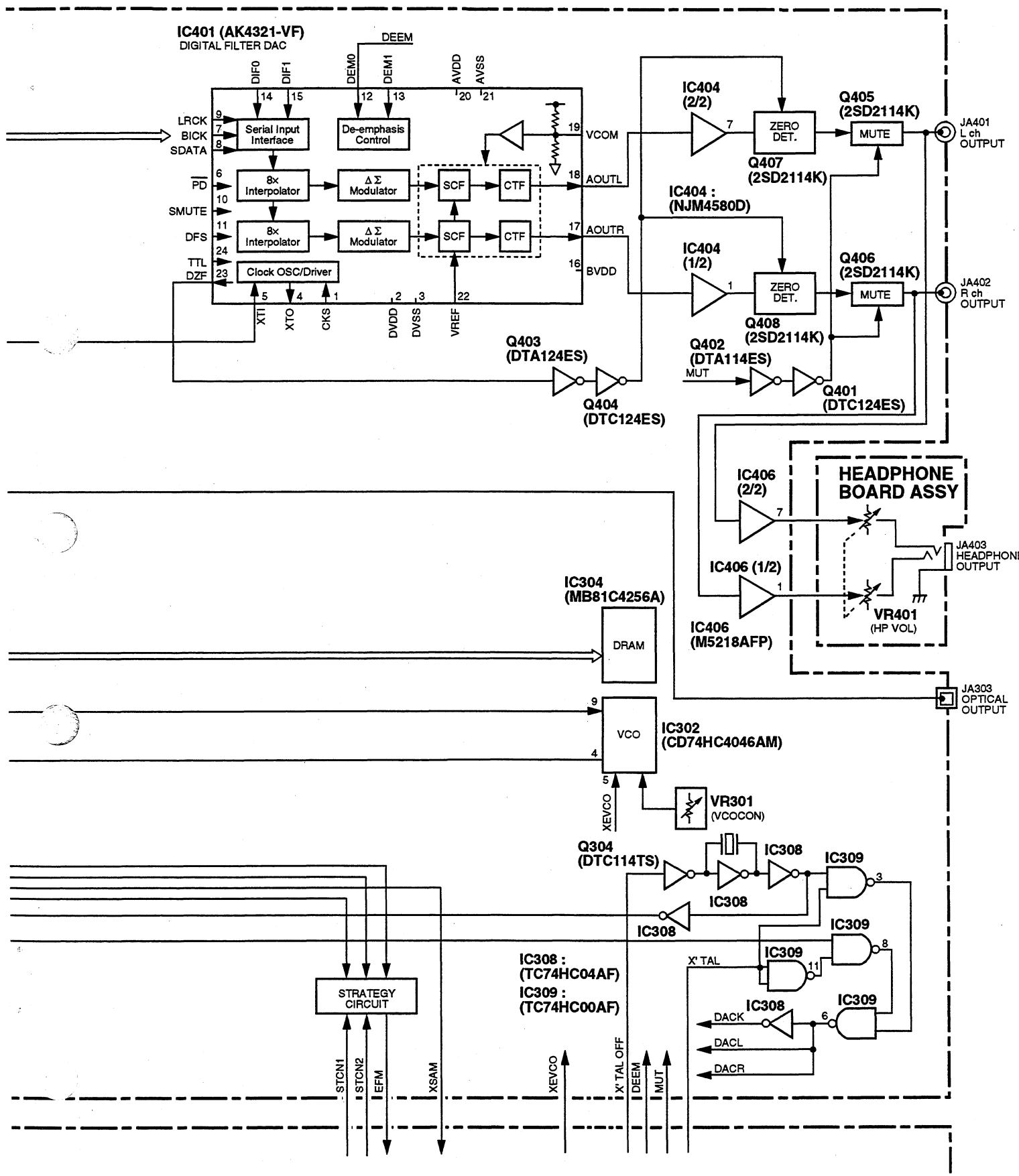
IC401 (AK4321-VF)
DIGITAL FILTER DAC
DEEM
DIF0
DIF1
DEM0
DEM1
AVDD
AVSS
LRCK
BICK
SDATA
PD
SMUTE
DFS
TTL
DZF
Serial Input Interface
De-emphasis Control
8x Interpolator
8x Interpolator
ΔΣ Modulator
ΔΣ Modulator
SCF
SCF
CTF
CTF
Clock OSC/Driver
VCOM
AOUTL
AOUTR
BVDD
XTI
XTO
CKS
DVDD
DVSS
VREF
IC404 (2/2)
IC404 (1/2)
IC404 : (NJM4580D)
ZERO DET.
ZERO DET.
Q405 (2SD2114K)
Q406 (2SD2114K)
Q407 (2SD2114K)
Q408 (2SD2114K)
MUTE
MUTE
JA401 L ch OUTPUT
JA402 R ch OUTPUT
Q403 (DTA124ES)
Q404 (DTC124ES)
Q402 (DTA114ES)
Q401 (DTC124ES)
MUT
HEADPHONE BOARD ASSY
IC406 (2/2)
IC406 (1/2)
IC406 (M5218AFP)
JA403 HEADPHONE OUTPUT
VR401 (HP VOL)
JA303 OPTICAL OUTPUT
IC304 (MB81C4256A)
DRAM
VCO
IC302 (CD74HC4046AM)
XEVCO
VR301 (VCOCON)
Q304 (DTC114TS)
IC308
IC309
IC308 : (TC74HC04AF)
IC309 : (TC74HC00AF)
X'TAL
DACK
DACL
DACR
STRATEGY CIRCUIT
STCN1
STCN2
EFM
XSAM
XEVCO
X'TAL OFF
DEEM
MUT

8. PANEL FACILITIES AND SPECIFICATIONS

■ PANEL FACILITIES

• FRONT PANEL

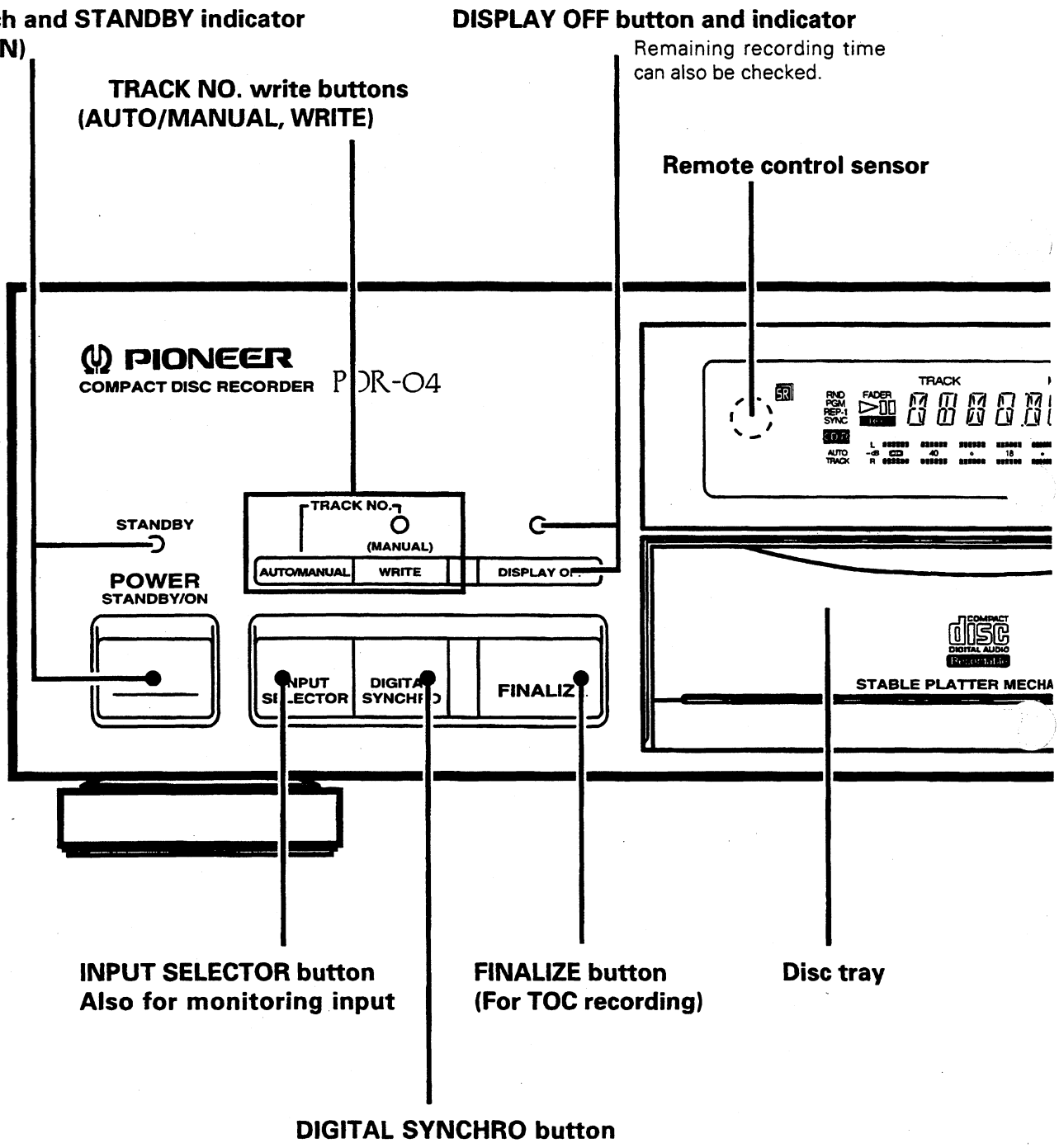

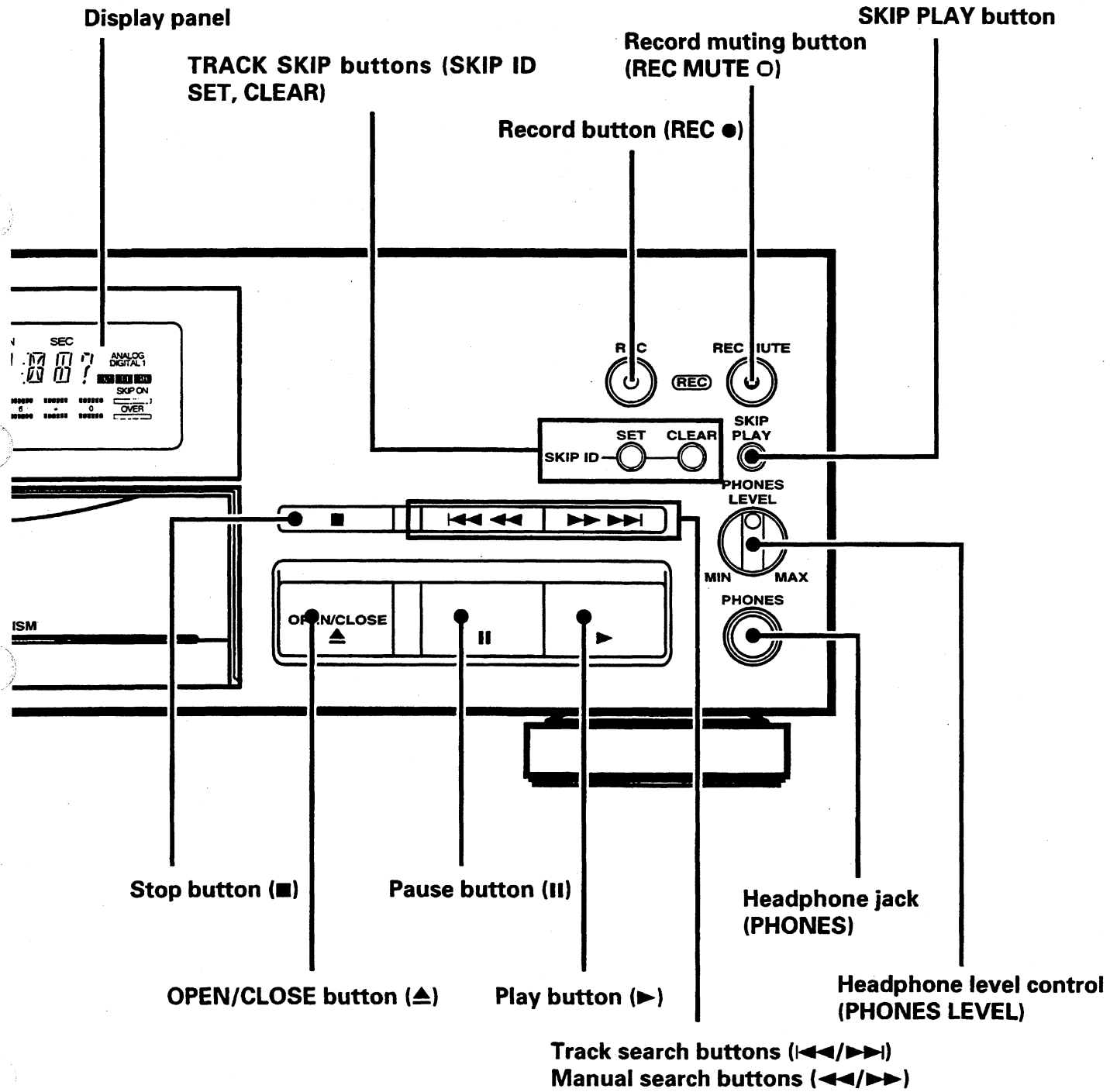
Display panel
SKIP PLAY button
Record muting button
(REC MUTE ○)
TRACK SKIP buttons (SKIP ID
SET, CLEAR)
Record button (REC ●)
SEC
ANALOG
DIGITAL 1
SKIP ON
OVER
REC
REC MUTE
SET
CLEAR
SKIP ID
SKIP
PLAY
PHONES
LEVEL
MIN
MAX
PHONES
OPEN/CLOSE
Stop button (■)
Pause button (II)
Headphone jack
(PHONES)
OPEN/CLOSE button (▲)
Play button (►)
Headphone level control
(PHONES LEVEL)
Track search buttons (|◄◄/►►|)
Manual search buttons (◄◄/►►)

PDR-04

• REMOTE CONTROL UNIT

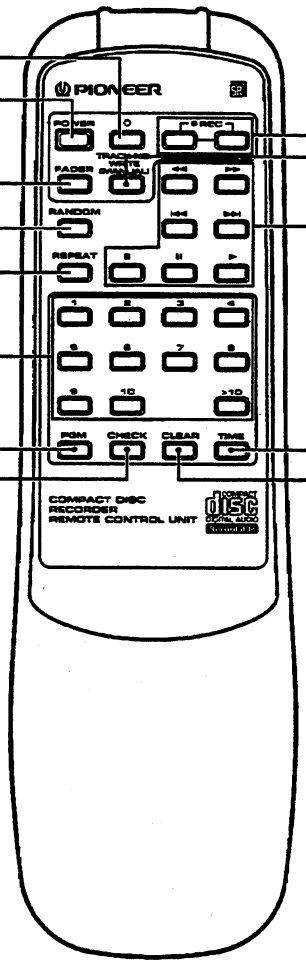

Record muting button (○)

POWER button

FADER button

RANDOM button

REPEAT button

Numeric buttons
(1 to 10, >10)

Program button (PGM)

Program check button
(CHECK)

Record buttons (● REC)

NOTE:
For recording, press the 2 buttons simultaneously.

Manual TRACK NO.
WRITE button (MANUAL)

Manual search buttons (◄◄/►►)

Track search buttons (I◄◄/►►I)

Stop button (■)

Pause button (II)

Play button (►)

TIME button

Program clear button
(CLEAR)

■ SPECIFICATIONS

1. GENERAL

Model ..... Compact disc audio system
Applicable discs ..... CDs and CD-Rs
Power supply ..... AC 120 V, 60 Hz
Power consumption ..... 16 W
Operating temperature ..... +5 °C to +35 °C
(+41 °F to +95 °F)
Weight (without package) ..... 5 kg (11 lb)
Max. dimensions .....420 (W) x 285 (D) x 125 (H) mm
16-9/16 (W) x 11-7/32 (D) x 4-15/16 (H) in.

2. AUDIO UNIT

Frequency characteristics .....2 Hz to 20 kHz
Playback S/N ..... 108 dB (EIAJ)
Playback dynamic range ..... 97 dB (EIAJ)
Playback total harmonic distortion ..... 0.004 % (EIAJ)
Playback channel separation ..... 96 dB
Recording S/N ..... 92 dB
Recording dynamic range ..... 92 dB
Recording total harmonic distortion .....0.005 %
Output voltage ..... 2 V
Wow-flutter ..... Less than measurement limit
((±0.001 % W.PEAK) (EIAJ))
Number of channels ..... 2 channels (stereo)
Optical output: ..... −15 to −20 dBm (wavelength: 660 nm)
Frequency deflection: Level 2 (standard mode)

* Recording specification values are for the LINE input (ANALOG).

3. INPUT JACKS

Optical digital input jack
Audio LINE input jack

4. OUTPUT JACKS

Optical digital output jack
Audio LINE output jack

5. RECORDING FUNCTIONS

- Recording
- Automatic digital-source synchro recording (1-track recording)
- Automatic digital-source synchro recording (All-track recording)
- EASY RECORDING OPERATION (ANALOG)
- REC MUTE
- AUTO TRACK INCREMENT
- AUTO REC/PAUSE
- Remaining recording time display
- PREVIOUS
- MANUAL TRACK INCREMENT
- INPUT SELECTOR
- TOC Write
- Fade-in/fade-out
- SCMS (Serial Copy Management System)
- Sampling monitor

6. PLAYBACK FUNCTIONS

- PLAY
- PAUSE
- STOP
- MANUAL search
- TRACK search
- Direct song selection
- 1-Track repeat
- All-track repeat
- Programmed repeat
- Programmed playback (max. 24 tracks)
- Program check
- Program correction
- Program clear
- Pause programming
- Program reservation
- SKIP playback
- DISPLAY OFF
- TIME display switching
- Random playback
- Fade-in/Fade-out

7. ACCESSORIES

- Remote control unit (CU-PD083) 1
- Size AA/R6P dry cell batteries 2
- Audio cables 2
- Operating Instructions 1

NOTE:
The specifications and design of this product are subject to change without notice, due to improvements.

• ACCESSORIES

Audio cables ... x 2
(analog recording input, analog playback output)

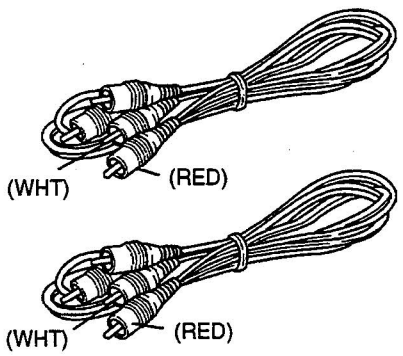

Remote control unit

AA/R6P dry cell batteries ... x 2

Operating instructions (this booklet)